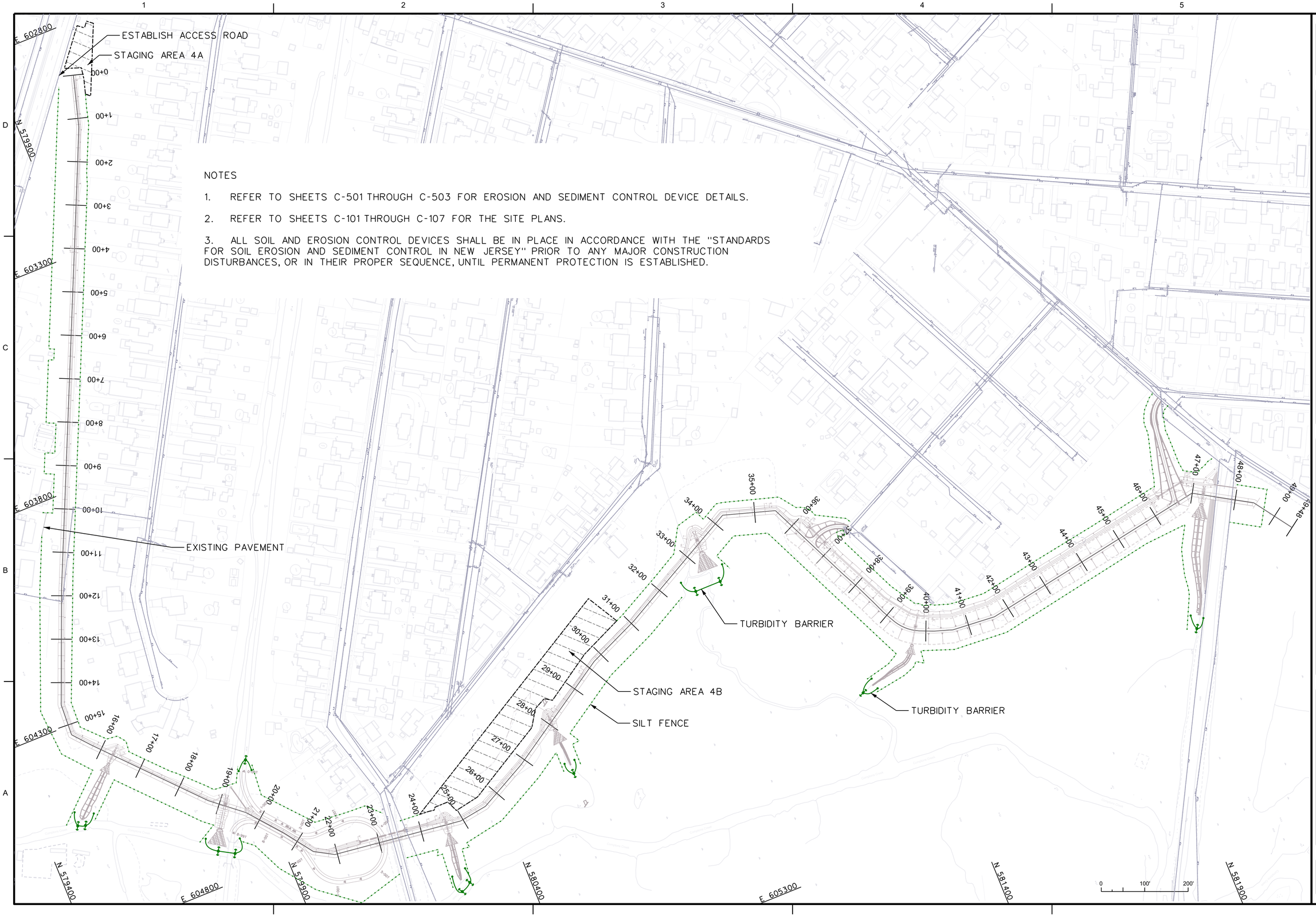

NOTES

1. REFER TO SHEETS C-501 THROUGH C-503 FOR EROSION AND SEDIMENT CONTROL DEVICE DETAILS.

2. REFER TO SHEETS C-101 THROUGH C-107 FOR THE SITE PLANS.

3. ALL SOIL AND EROSION CONTROL DEVICES SHALL BE IN PLACE IN ACCORDANCE WITH THE "STANDARDS FOR SOIL EROSION AND SEDIMENT CONTROL IN NEW JERSEY" PRIOR TO ANY MAJOR CONSTRUCTION DISTURBANCES, OR IN THEIR PROPER SEQUENCE, UNTIL PERMANENT PROTECTION IS ESTABLISHED.

US Army Corps of Engineers®
New York District

MARK	DESCRIPTION	DATE	APPR.
1	REV IN ACCORDANCE WITH AMDT 0004	DEC 2017	

MARK	DESCRIPTION	DATE	APPR.

U.S. ARMY CORPS OF ENGINEERS
NEW YORK DISTRICT
NEW YORK, NY

DESIGNED BY: | DATE:
DWN BY: | CKD BY: | SOLICITATION NO.:
SUBMITTED BY: | CONTRACT NO.:
PLOT SCALE: | ISSUE DATE: | FILE NUMBER:
SIZE: | FILE NAME: G-108.dgn

HURRICANE & STORM DAMAGE REDUCTION
RARITAN BAY & SANDY HOOK BAY
PHASE II, CONTRACT 4
FORT MONMOUTH, NJ

SOIL + EROSION
CONTROL PLAN

SHEET IDENTIFICATION
G-108
SHEET 12 OF 148

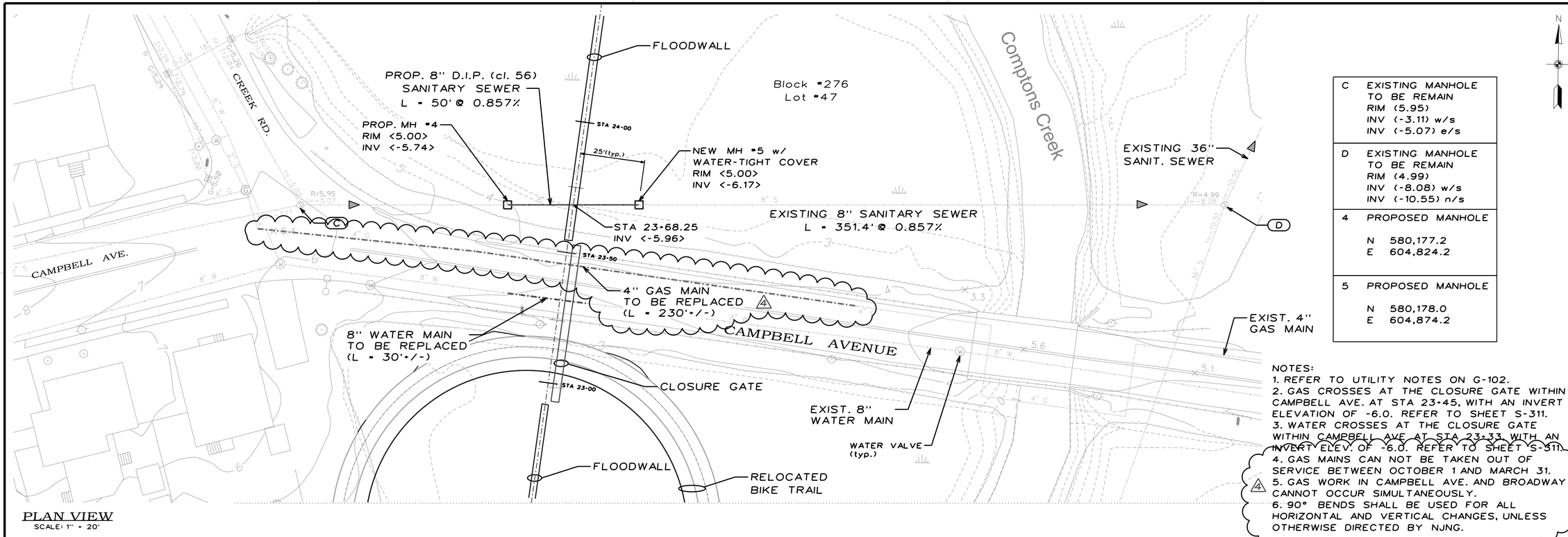

PLAN VIEW
SCALE: 1" = 20'

C	EXISTING MANHOLE TO BE REMAIN RIM (5.95) INV (-3.11) w/s INV (-5.07) e/s
D	EXISTING MANHOLE TO BE REMAIN RIM (4.99) INV (-8.08) w/s INV (-10.55) n/s
4	PROPOSED MANHOLE N 580,177.2 E 604,824.2
5	PROPOSED MANHOLE N 580,178.0 E 604,874.2

NOTES:
1. REFER TO UTILITY NOTES ON G-102.
2. GAS CROSSES AT THE CLOSURE GATE WITHIN CAMPBELL AVE. AT STA 23+45, WITH AN INVERT ELEVATION OF -6.0. REFER TO SHEET S-311.
3. WATER CROSSES AT THE CLOSURE GATE WITHIN CAMPBELL AVE AT STA 23+33, WITH AN INVERT ELEV. OF -6.0. REFER TO SHEET S-311.
4. GAS MAINS CAN NOT BE TAKEN OUT OF SERVICE BETWEEN OCTOBER 1 AND MARCH 31.
5. GAS WORK IN CAMPBELL AVE. AND BROADWAY CANNOT OCCUR SIMULTANEOUSLY.
6. 90° BENDS SHALL BE USED FOR ALL HORIZONTAL AND VERTICAL CHANGES, UNLESS OTHERWISE DIRECTED BY NJNG.

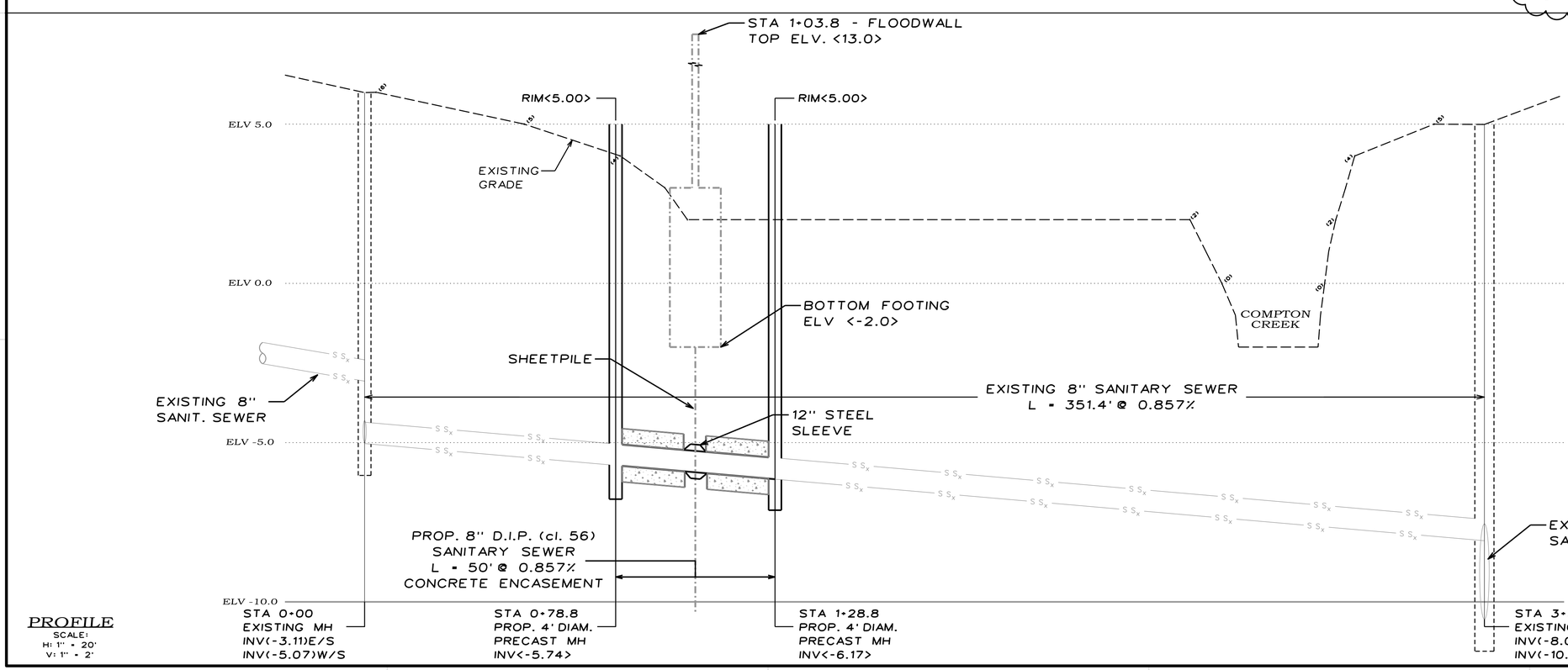

PROFILE
SCALE:
H: 1" = 20'
V: 1" = 2'

US Army Corps of Engineers®
New York District

MARK	DESCRIPTION	DATE	APPR.
4	rev STA in utility note	8/15/17	

MARK	DESCRIPTION	DATE	APPR.

DESIGNED BY: | DATE:
DWN BY: | CKD BY: | SOLICITATION NO.:
SUBMITTED BY: | CONTRACT NO.:
PLOT SCALE: | ISSUE DATE: | FILE NUMBER:
SIZE: | FILE NAME:

U.S. ARMY CORPS OF ENGINEERS
NEW YORK DISTRICT
NEW YORK, NY

HURRICANE & STORM DAMAGE REDUCTION
RARITAN BAY & SANDY HOOK BAY
PHASE II, CONTRACT 4
PORT MONMOUTH, NJ

SANITARY CROSSING #2
CAMPBELL AVENUE

SHEET IDENTIFICATION
C-109
SHEET 21 OF 148

NOTES:
1. REFER TO UTILITY NOTES ON G-102.
2. GAS CROSSES AT THE CLOSURE GATE WITHIN BROADWAY AT STA 47+61, WITH AN INVERT ELEVATION OF <6.0>. REFER TO SHEET G-311.
3. GAS MAINS CAN NOT BE TAKEN OUT OF SERVICE BETWEEN OCTOBER 1 AND MARCH 31.
4. GAS WORK IN CAMPBELL AVE. AND BROADWAY CANNOT OCCUR SIMULTANEOUSLY.
5. 90° BENDS SHALL BE USED FOR ALL HORIZONTAL AND VERTICAL CHANGES, UNLESS OTHERWISE DIRECTED BY NJNG.

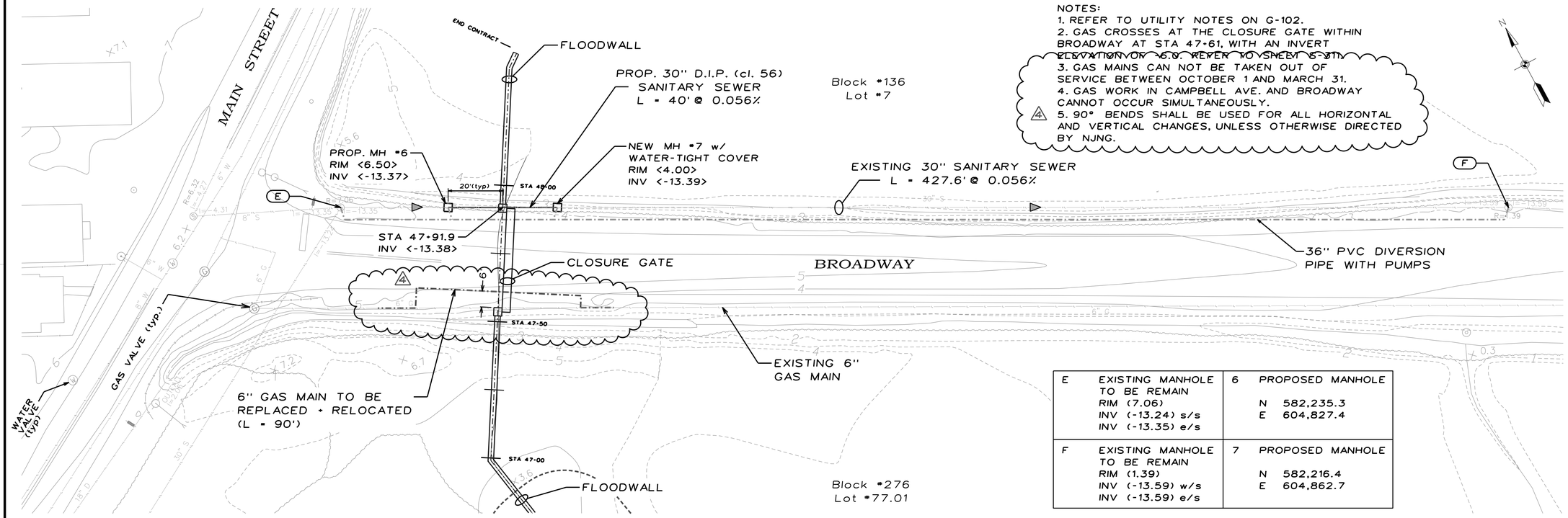

E	EXISTING MANHOLE TO BE REMAIN RIM (7.06) INV (-13.24) s/s INV (-13.35) e/s	6	PROPOSED MANHOLE N 582,235.3 E 604,827.4
F	EXISTING MANHOLE TO BE REMAIN RIM (1.39) INV (-13.59) w/s INV (-13.59) e/s	7	PROPOSED MANHOLE N 582,216.4 E 604,862.7

PLAN VIEW
SCALE: 1" = 20'

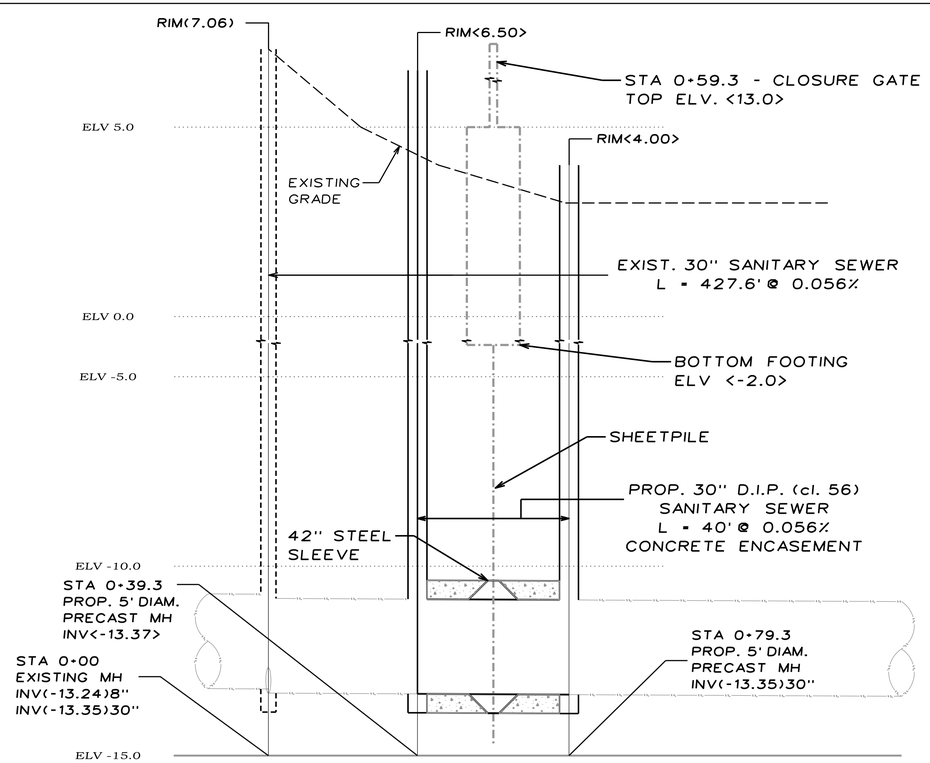

PROFILE
SCALE:
H: 1" = 20'
V: 1" = 2'

US Army Corps of Engineers®
New York District

MARK	DESCRIPTION	DATE	APPR.
4	NJNG comments	10/21/17	

MARK	DESCRIPTION	DATE	APPR.

DESIGNED BY: DATE:
DWN BY: CKD BY: SOLICITATION NO.:
SUBMITTED BY: CONTRACT NO.:
PLOT SCALE: ISSUE DATE: FILE NUMBER:
SIZE: FILE NAME:

U.S. ARMY CORPS OF ENGINEERS
NEW YORK DISTRICT
NEW YORK, NY

HURRICANE & STORM DAMAGE REDUCTION
RARITAN BAY & SANDY HOOK BAY
PHASE II, CONTRACT 4
PORT MONMOUTH, NJ

SANITARY CROSSING #3
BROADWAY

SHEET IDENTIFICATION
C-110
SHEET 22 OF 148

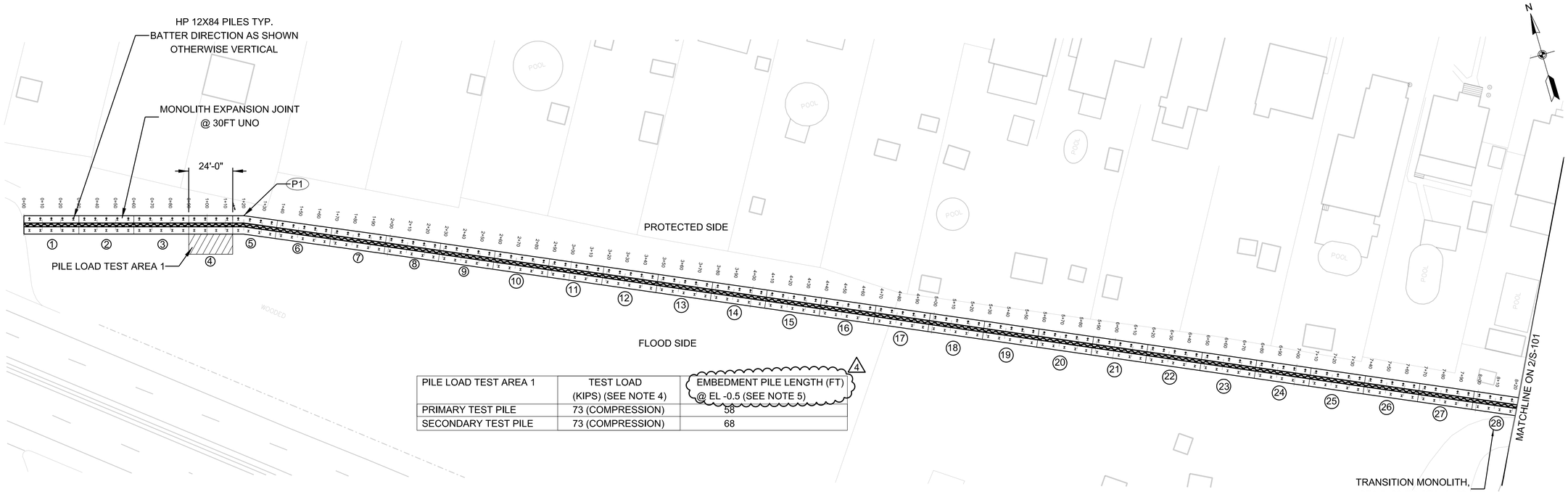

PILE LOAD TEST AREA 1	TEST LOAD (KIPS) (SEE NOTE 4)	EMBEDMENT PILE LENGTH (FT) @ EL -0.5 (SEE NOTE 5)
PRIMARY TEST PILE	73 (COMPRESSION)	58
SECONDARY TEST PILE	73 (COMPRESSION)	68

1 / S-101 FLOODWALL PLAN OVERVIEW STA 0+00 TO STA 8+20

1/32":1'

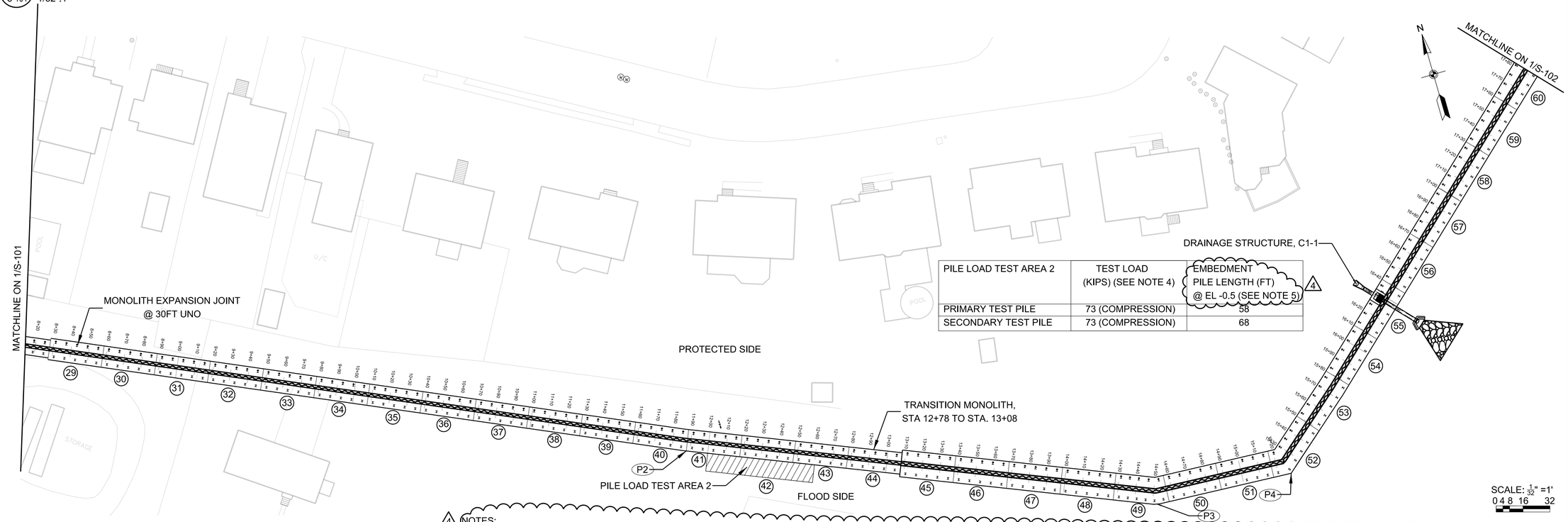

PILE LOAD TEST AREA 2	TEST LOAD (KIPS) (SEE NOTE 4)	EMBEDMENT PILE LENGTH (FT) @ EL -0.5 (SEE NOTE 5)
PRIMARY TEST PILE	73 (COMPRESSION)	58
SECONDARY TEST PILE	73 (COMPRESSION)	68

SCALE: 1/32" =1'
0 4 8 16 32

2 / S-101 FLOODWALL PLAN OVERVIEW STA 8+20 TO STA 17+80

1/32" : 1'

4 NOTES:

1. BEND POINT DENOTED AS (P#) AND MONOLITH NUMBER DENOTED AS (#)
2. BEND MONOLITHS ARE SHOWN ON SHEETS S-105 AND S-106
3. SHEET PILE CUT-OFF WALL IS AT CENTERLINE OF FLOODWALL STEM UNLESS NOTED OTHERWISE.
4. TEST PILE SHALL BE LOADED TO A MAXIMUM OF 300% OF THE TEST LOAD SHOWN HERE PER SPEC 31 62 16.16
5. CONTRACTOR SHALL ADD ADDITIONAL LENGTH TO THE TEST PILE LENGTH TO ACCOUNT FOR THE DIFFERENCE BETWEEN THE SOIL ELEVATIONS AT THE TEST LOCATIONS AND THE BOTTOM OF THE FLOODWALL. THE CONTRACTOR SHALL INSTALL A CASING AROUND THE PILE FOR THE ADDITIONAL LENGTH AND SHALL REMOVE THE SOIL BETWEEN THE CASING AND THE PILE FOR THIS ADDITIONAL LENGTH.

US Army Corps of Engineers®
New York District

MARK	DESCRIPTION	DATE	APPR.	MARK	DESCRIPTION	DATE	APPR.
4	PILE LENGTH NOTE ADDED	DEC 2017					

DESIGNED BY: JAP
DWN BY: JAP
CKD BY:
SUBMITTED BY:
PLOT SCALE:
ISSUE DATE:
DATE: 2017-06-30
SOLICITATION NO.:
CONTRACT NO.:
FILE NUMBER:
SIZE: ANSI D
FILE NAME: S-101 FLOODWALL PLAN OVERVIEW PART 1.dgn

U.S. ARMY CORPS OF ENGINEERS
NEW YORK DISTRICT
NEW YORK, NY

HURRICANE & STORM DAMAGE REDUCTION
RARITAN BAY & SANDY HOOK BAY
PHASE II, CONTRACT 4
PORT MONMOUTH, NJ

FLOODWALL PLAN
OVERVIEW PART 1

SHEET IDENTIFICATION
S-101
SHEET 105 OF 148

PILE LOAD TEST AREA 3	TEST LOAD (KIPS) (SEE NOTE #4)	EMBEDMENT PILE LENGTH (FT) @ EL -4 (SEE NOTE 5) 4
PRIMARY TEST PILE	145 (COMPRESSION)	75
SECONDARY TEST PILE	145 (COMPRESSION)	85

PILE LOAD TEST AREA 4 (CAMPBELL GATE)	TEST LOAD (KIPS) (SEE NOTE #4)	EMBEDMENT PILE LENGTH (FT) @ EL -2.5 (SEE NOTE 5) 4
PRIMARY TEST PILE	93 (COMPRESSION)	62
SECONDARY TEST PILE	93 (COMPRESSION)	72

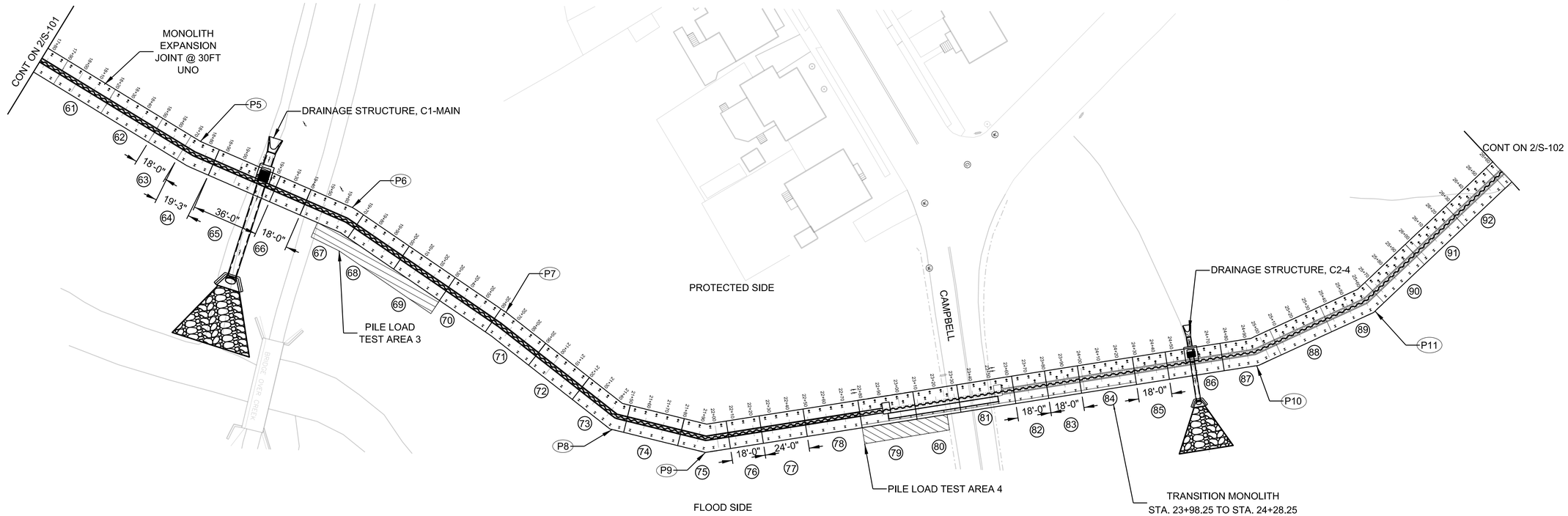

1 S-102 FLOODWALL PLAN OVERVIEW STA 17+80 TO STA 26+60
1/32":1'

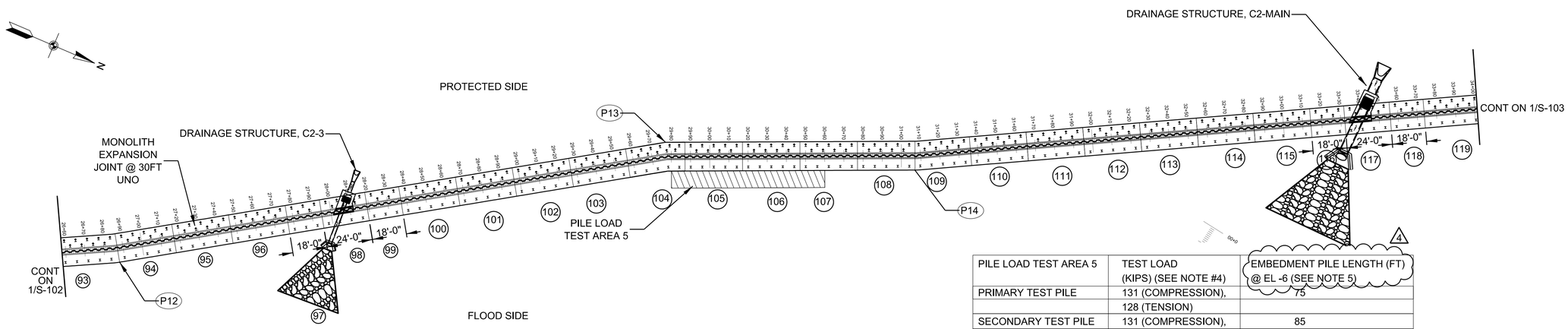

2 S-102 FLOODWALL PLAN OVERVIEW STA 26+60 TO STA 34+00
1/32" : 1'

PILE LOAD TEST AREA 5	TEST LOAD (KIPS) (SEE NOTE #4)	EMBEDMENT PILE LENGTH (FT) @ EL -6 (SEE NOTE 5) 4
PRIMARY TEST PILE	131 (COMPRESSION),	75
	128 (TENSION)	
SECONDARY TEST PILE	131 (COMPRESSION),	85
	128 (TENSION)	

NOTES:
1. BEND POINT DENOTED AS P# AND MONOLITH NUMBER DENOTED AS #
2. BEND MONOLITHS ARE SHOWN ON SHEETS S-105 AND S-106
3. SHEET PILE CUT-OFF WALL IS AT CENTERLINE OF FLOODWALL STEM UNLESS NOTED OTHERWISE.
4. TEST PILE SHALL BE LOADED TO A MAXIMUM OF 300% OF THE TEST LOAD SHOWN HERE PER SPEC 31 62 16.16
5. CONTRACTOR SHALL ADD ADDITIONAL LENGTH TO THE TEST PILE LENGTH TO ACCOUNT FOR THE DIFFERENCE BETWEEN THE SOIL ELEVATIONS AT THE TEST LOCATIONS AND THE BOTTOM OF THE FLOODWALL. THE CONTRACTOR SHALL INSTALL A CASING AROUND THE PILE FOR THE ADDITIONAL LENGTH AND SHALL REMOVE THE SOIL BETWEEN THE CASING AND THE PILE FOR THIS ADDITIONAL LENGTH. 4

SCALE: $\frac{1}{32}$" =1'
0 4 8 16 32

US Army Corps of Engineers®
New York District

MARK	DESCRIPTION	DATE	APPR.	MARK	DESCRIPTION	DATE	APPR.
4	PILE LENGTH NOTE ADDED	DEC-2017					

DESIGNED BY: JAP | DATE: 2017-06-30
DWN BY: JAP | CKD BY: CHK | SOLICITATION NO.:
SUBMITTED BY: | CONTRACT NO.:
PLOT SCALE: | ISSUE DATE: | FILE NUMBER:
SIZE: ANSI D | FILE NAME: S-102 FLOODWALL PLAN OVERVIEW PART 2.dgn

U.S. ARMY CORPS OF ENGINEERS
NEW YORK DISTRICT
NEW YORK, NY

HURRICANE & STORM DAMAGE REDUCTION
RARITAN BAY & SANDY HOOK BAY
PHASE II, CONTRACT 4
PORT MONMOUTH, NJ

FLOODWALL PLAN OVERVIEW PART 2

SHEET IDENTIFICATION
S-102
SHEET 105 OF 148

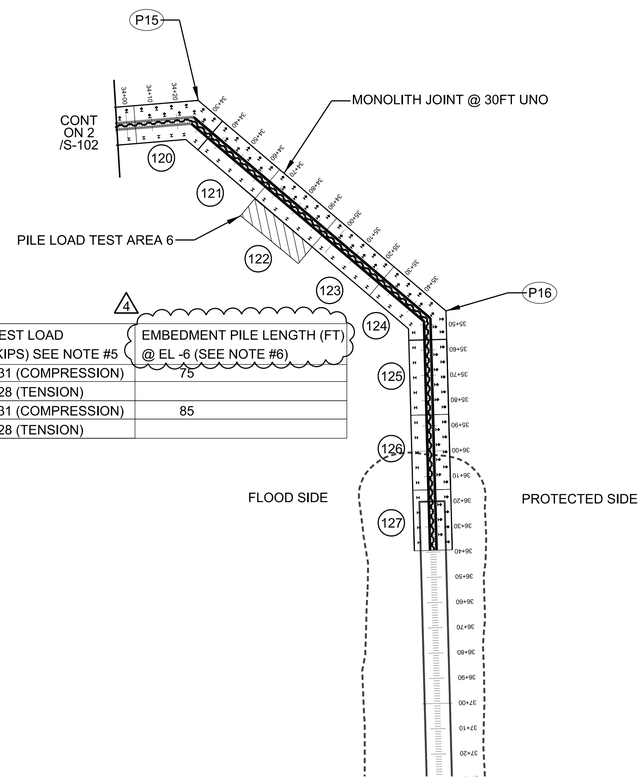

PILE LOAD TEST AREA 6	TEST LOAD (KIPS) SEE NOTE #5	EMBEDMENT PILE LENGTH (FT) @ EL -6 (SEE NOTE #6)
PRIMARY TEST PILE	131 (COMPRESSION)	75
	128 (TENSION)	
SECONDARY TEST PILE	131 (COMPRESSION)	85
	128 (TENSION)	

4

PILE LOAD TEST AREA 7 (BROADWAY GATE)	TEST LOAD (KIPS) SEE NOTE #5	EMBEDMENT PILE LENGTH (FT) @ EL -2.5 (SEE NOTE #6)
PRIMARY TEST PILE	101 (COMPRESSION)	54
SECONDARY TEST PILE	101 (COMPRESSION)	64

4

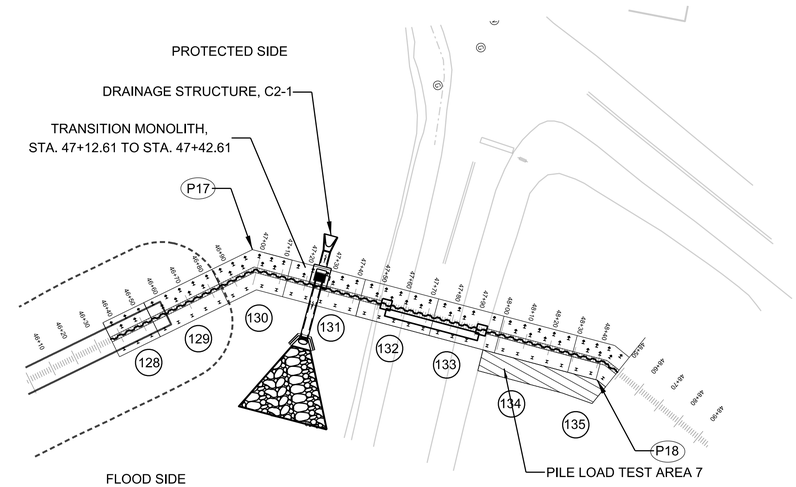

2 S-103 FLOODWALL PLAN OVERVIEW STA 34+00 TO STA 36+39
1/32" : 1'

3 S-103 FLOODWALL PLAN OVERVIEW STA 46+36 TO 48+49
1/32" : 1'

NOTES:

1. LEVEE TO FLOODWALL TRANSITION DETAIL ON SHEET S-104
2. BEND POINT DENOTED AS P# AND MONOLITH NUMBER DENOTED AS #
3. BEND MONOLITHS ARE SHOWN ON SHEETS S-105 AND S-106
4. SHEET PILE CUT-OFF WALL IS AT CENTERLINE OF FLOODWALL STEM UNLESS NOTED OTHERWISE.
5. TEST PILE SHALL BE LOADED TO A MAXIMUM OF 300% OF THE TEST LOAD SHOWN HERE PER SPEC 31 62 16.16
6. CONTRACTOR SHALL ADD ADDITIONAL LENGTH TO THE TEST PILE LENGTH TO ACCOUNT FOR THE DIFFERENCE BETWEEN THE SOIL ELEVATIONS AT THE TEST LOCATIONS AND THE BOTTOM OF THE FLOODWALL. THE CONTRACTOR SHALL INSTALL A CASING AROUND THE PILE FOR THE ADDITIONAL LENGTH AND SHALL REMOVE THE SOIL BETWEEN THE CASING AND THE PILE FOR THIS ADDITIONAL LENGTH.

4

4

SCALE: $\frac{1}{32}$" =1'
0 4 8 16 32

US Army Corps of Engineers®
New York District

MARK	DESCRIPTION	DATE	APPR.	MARK	DESCRIPTION	DATE	APPR.
4	PILE LENGTH NOTE ADDED	DEC 2017					

U.S. ARMY CORPS OF ENGINEERS
NEW YORK DISTRICT
NEW YORK, NY

DESIGNED BY: JAP
DWN BY: JAP
CKD BY: CRK
SUBMITTED BY:
PLOT SCALE:
SIZE: ANSI D
DATE: 2017-06-30
SOLICITATION NO.:
CONTRACT NO.:
FILE NUMBER:
ISSUE DATE:
FILE NAME: S-103 FLOODWALL PLAN OVERVIEW PART 3.dgn

HURRICANE & STORM DAMAGE REDUCTION
RARITAN BAY & SANDY HOOK BAY
PHASE II, CONTRACT 4
PORT MONMOUTH, NJ

FLOODWALL PLAN
OVERVIEW PART 3

SHEET IDENTIFICATION
S-103
SHEET 107 OF 148

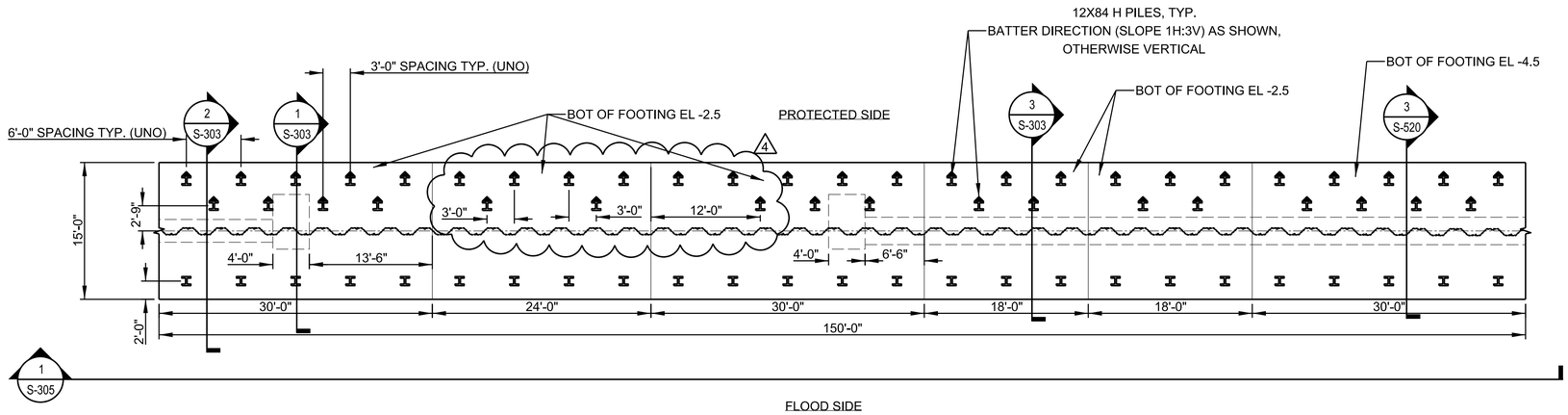

1 S-107 CAMPBELL CLOSURE GATE FOUNDATION PLAN (STA 22+78.25 TO STA 24+28.25)

SCALE: $\frac{1}{8}$"= 1'

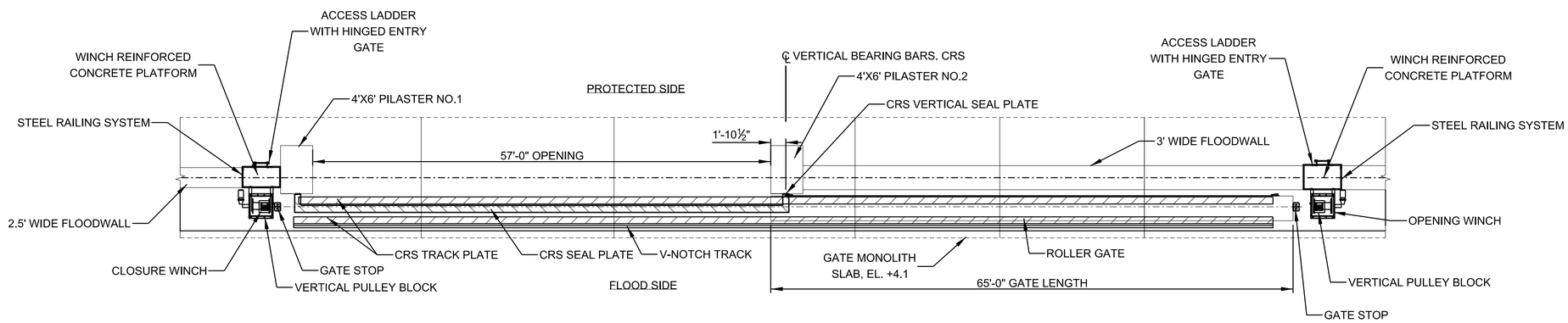

2 S-107 PLAN - CAMPBELL CLOSURE GATE IN STORED POSITION

SCALE: $\frac{1}{8}$"= 1'

SCALE: $\frac{1}{8}$"=1'

0 4' 8' 16'

US Army Corps of Engineers®
New York District

MARK	DESCRIPTION	DATE	APPR.	MARK	DESCRIPTION	DATE	APPR.
1	PILE AND DIMENSION SPACE CHANGED	DEC-2017					

DESIGNED BY: JAP
DWN BY: JAP
CKD BY:
SUBMITTED BY:
DATE: 2017-06-30
SOLICITATION NO.:
CONTRACT NO.:
PLOT SCALE:
ISSUE DATE:
FILE NUMBER:
SIZE: ANSI D
FILE NAME:

U.S. ARMY CORPS OF ENGINEERS
NEW YORK DISTRICT
NEW YORK, NY

HURRICANE & STORM DAMAGE REDUCTION
RARITAN BAY & SANDY HOOK BAY
PHASE II, CONTRACT 4
PORT MONMOUTH, NJ

CAMPBELL CLOSURE GATE FOUNDATION PLAN AND SCHEMATIC

SHEET IDENTIFICATION
S-107
SHEET 111 OF 148

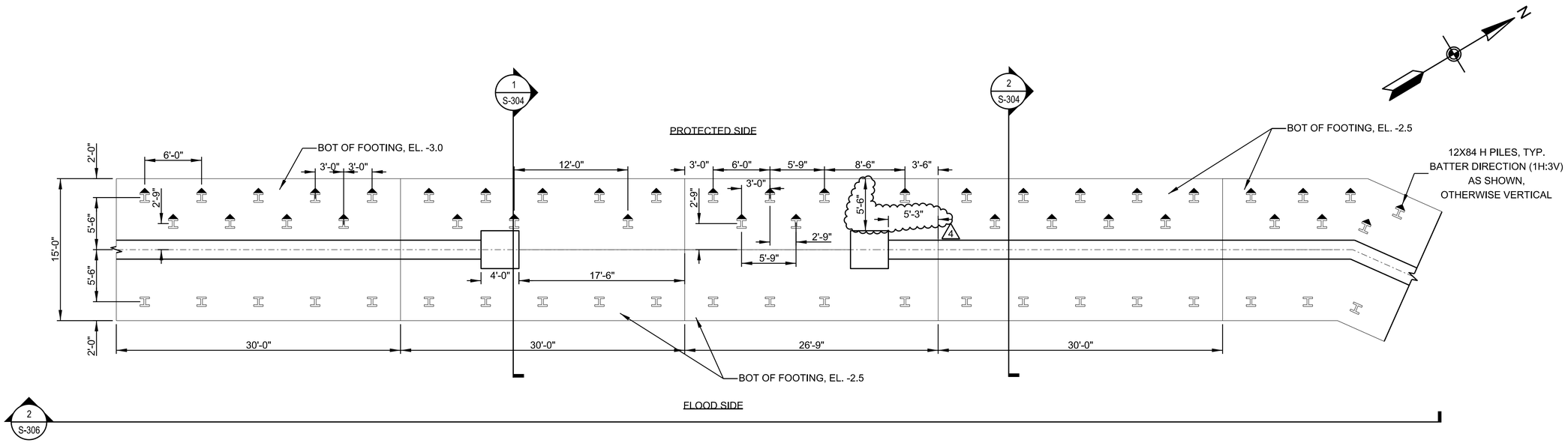

1 S-108 BROADWAY CLOSURE GATE FOUNDATION PLAN (STA 47+12.61 TO 48+49)

SCALE: 1/6" = 1'

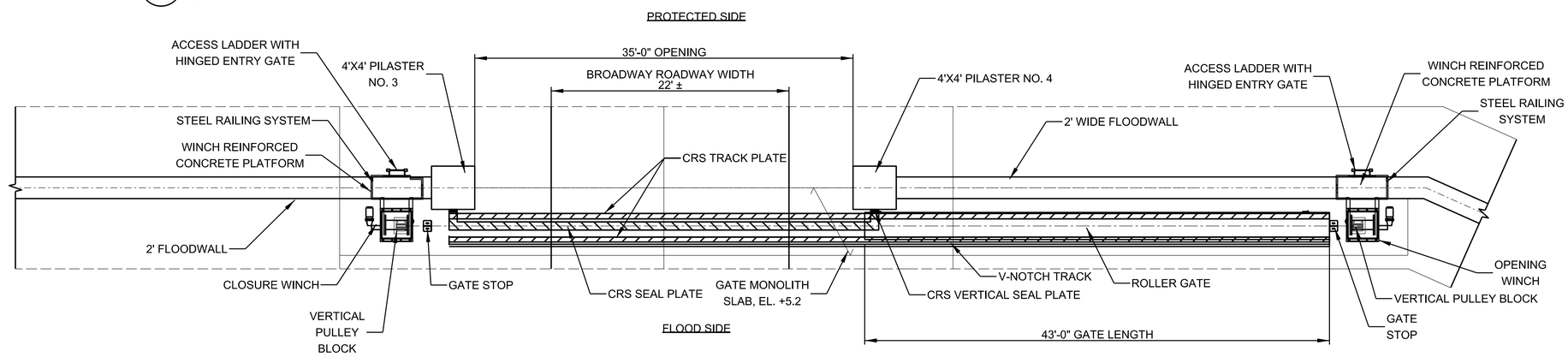

2 S-108 PLAN - BROADWAY CLOSURE GATE IN STORED POSITION

SCALE: 1/6" = 1'

SCALE: 1/6" = 1'
0 3' 6' 12'

US Army Corps of Engineers
New York District

MARK	DESCRIPTION	DATE	APPR.	MARK	DESCRIPTION	DATE	APPR.
1	DETAILS CHANGED	DEC 2017					

DESIGNED BY: BEC
DWN BY: BEC
CKD BY: CRK
SUBMITTED BY:
DATE: 2017-06-30
SOLICITATION NO.:
CONTRACT NO.:
PLOT SCALE:
ISSUE DATE:
FILE NUMBER:
SIZE: ANSI D
FILE NAME:

U.S. ARMY CORPS OF ENGINEERS
NEW YORK DISTRICT
NEW YORK, NY

HURRICANE & STORM DAMAGE REDUCTION
RARITAN BAY & SANDY HOOK BAY
PHASE II, CONTRACT 4
PORT MONMOUTH, NJ

BROADWAY CLOSURE GATE
FOUNDATION PLAN
AND SCHEMATIC

SHEET IDENTIFICATION
S-108
SHEET 112 OF 148

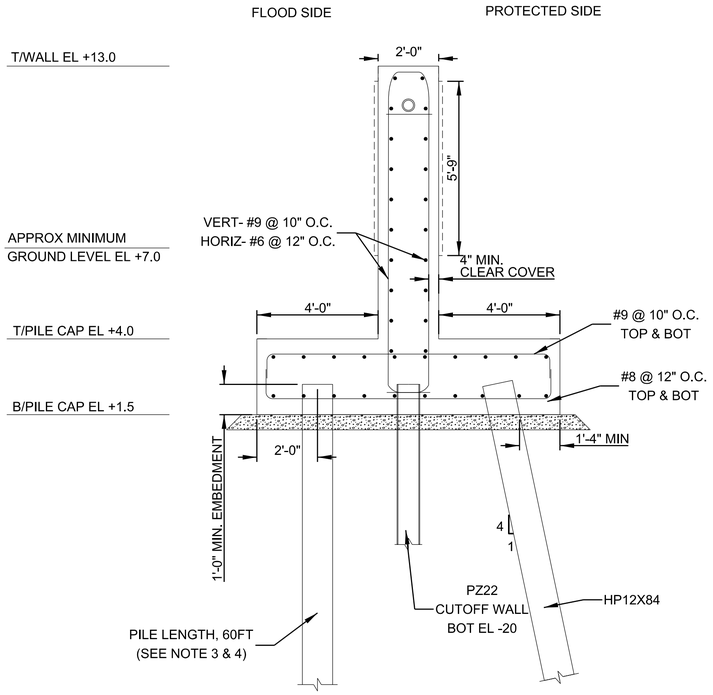

NOTES:
PILE CONNECTION ARE PINNED.

1 S-301 TYPICAL T - FLOOD WALL SECTION STA. 0+00 TO STA. 7+98
SCALE 2/5" = 1'

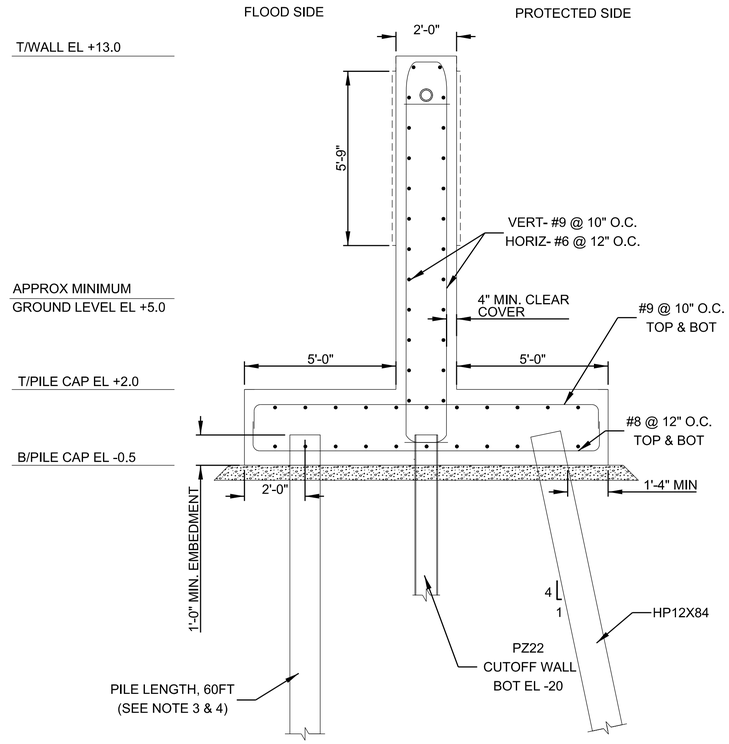

NOTES:
PILE CONNECTION ARE PINNED.

2 S-301 TYPICAL T - FLOOD WALL SECTION STA. 8+28 TO STA. 12+78
SCALE 2/5" = 1'

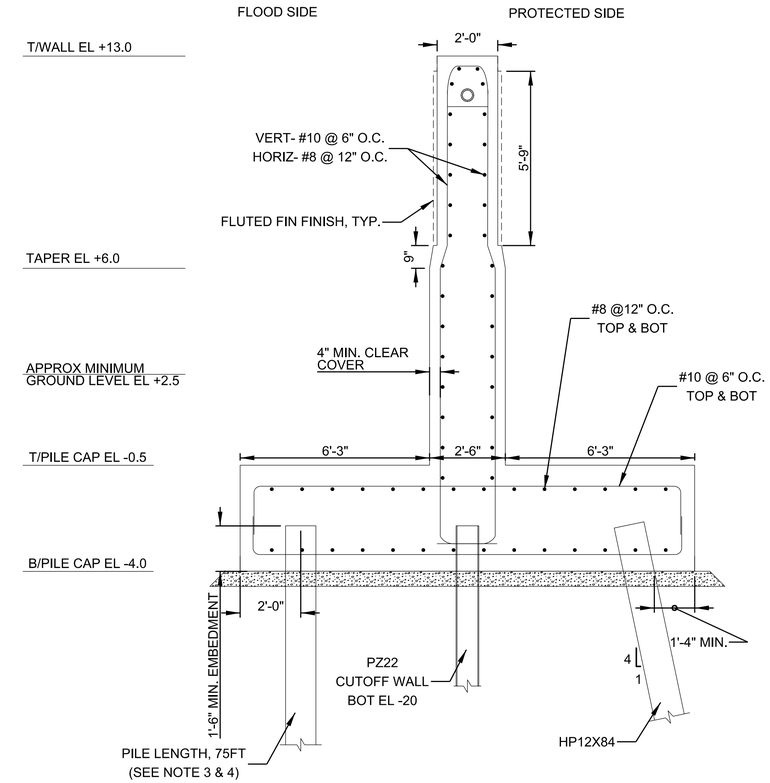

NOTES:
PILE CONNECTIONS ARE FIXED.

3 S-301 TYPICAL T - FLOOD WALL SECTION STA. 13+08 TO STA. 22+78.25
SCALE 2/5" = 1'

NOTES:

1. THE TYPICAL FLOODWALL SECTIONS FOR THE PIPES ARE SHOWN ON SHEET S-307 TO S-310.
2. THE TYPICAL FLOODWALL SECTIONS FOR THE CLOSURE GATES ARE SHOWN ON SHEET S-303 AND S-304.
3. THE PILE LENGTHS ARE STATED FOR ESTIMATING PURPOSES ONLY. THE ACTUAL PILE LENGTHS SHALL BE BASED ON THE PILE LOAD TEST.
4. BATTER PILES BOTTOM TIP ELEVATION SHALL MATCH THE VERTICAL PILES BOTTOM TIP ELEVATION.
5. T-FLOODWALL SECTION STA. 7+98 TO STA. 8+28 LOCATED IN 1/S-520.
6. T-FLOODWALL SECTION STA. 12+78 TO STA. 13+08 LOCATED IN 2/S-520.
7. MINIMUM OF 6" CRUSH STONE BASE, SHOWN SCHEMATICALLY, OR MUD SLAB TO FACILITATE CONSTRUCTION AS PART OF CONTRACTOR'S MEANS AND METHODS.
8. FLOODWALLS SHALL BE STAINED AND HAVE AN ANTI-GRAFFITI COATING.
9. PINNED PILE CONNECTIONS LOCATED IN 5/S-302.
10. MAXIMUM 1" OFFSET ON BOTH SIDES OF H-PILES ALLOWED FOR REBARS PASSING THRU THE PILES.

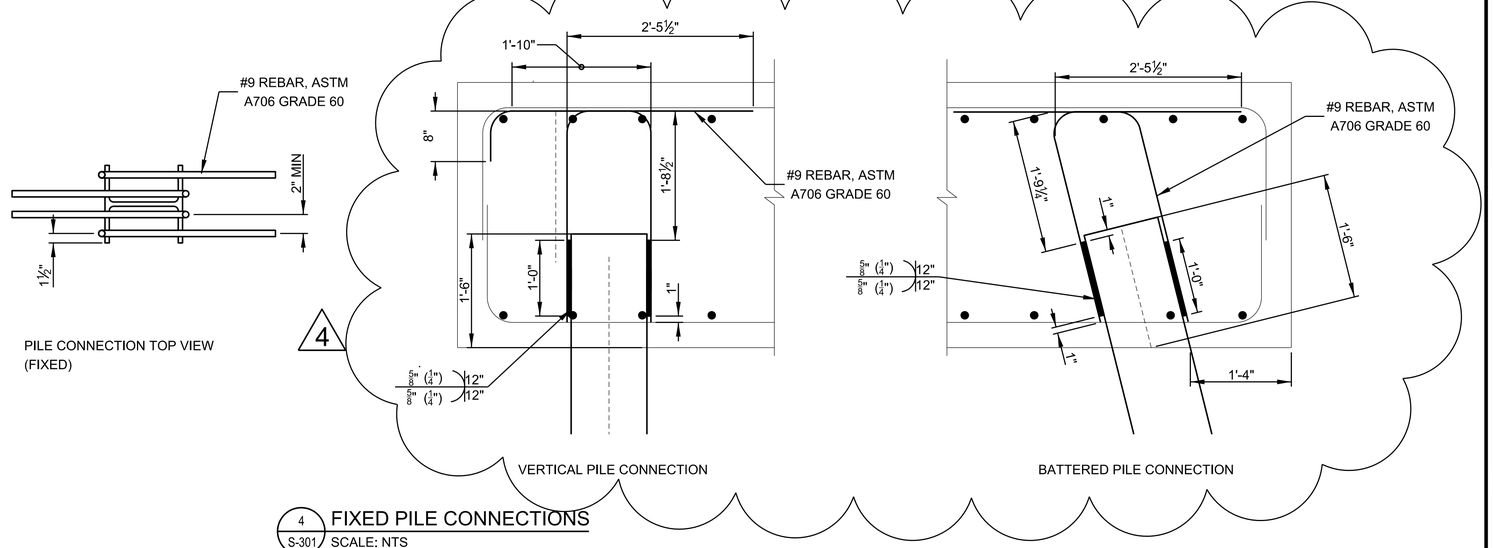

4 S-301 FIXED PILE CONNECTIONS
SCALE: NTS

US Army Corps of Engineers®
New York District

MARK	DESCRIPTION	DATE	APPR.	MARK	DESCRIPTION	DATE	APPR.
4	PILE CONNECTION DETAIL CHANGED	DEC 2017					

DESIGNED BY: JAP
DWN BY: JAP
CKD BY:
SUBMITTED BY:
PLOT SCALE:
SIZE: ANSI D
FILE NAME:
DATE: 2017-06-30
SOLICITATION NO.:
CONTRACT NO.:
FILE NUMBER:

U.S. ARMY CORPS OF ENGINEERS
NEW YORK DISTRICT
NEW YORK, NY

HURRICANE & STORM DAMAGE REDUCTION
RARITAN BAY & SANDY HOOK BAY
PHASE II, CONTRACT 4
PORT MONMOUTH, NJ

TYPICAL FLOODWALL SECTIONS

SHEET IDENTIFICATION
S-301
SHEET 113 OF 148

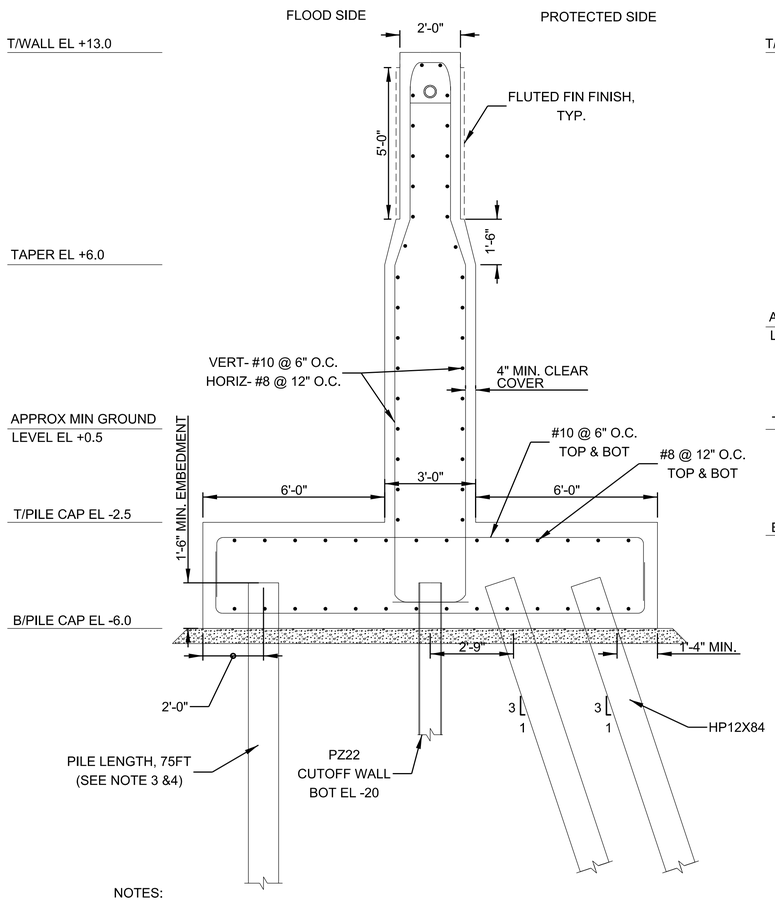

NOTES:
PILE CONNECTIONS ARE FIXED

1 S-302 TYPICAL T - FLOOD WALL SECTION STA. 24+28.25 TO STA. 36+39
SCALE 2/5" = 1'

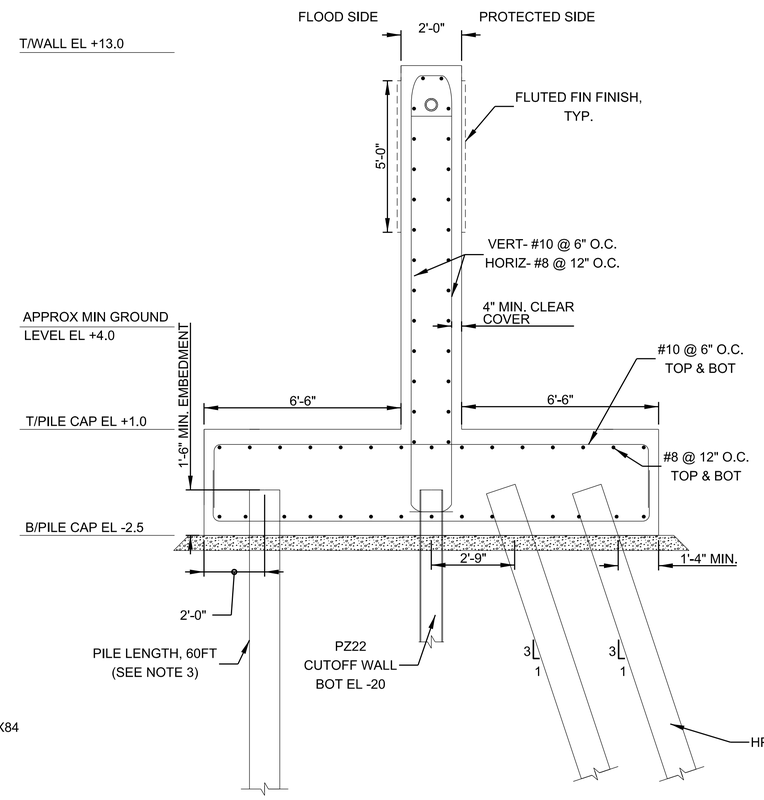

NOTES:
PILE CONNECTIONS ARE FIXED

2 S-302 TYPICAL T - FLOOD WALL SECTION STA. 46+36 TO STA. 47+12.61 AND STA. 47+42.61 TO 48+49
SCALE 2/5" = 1'

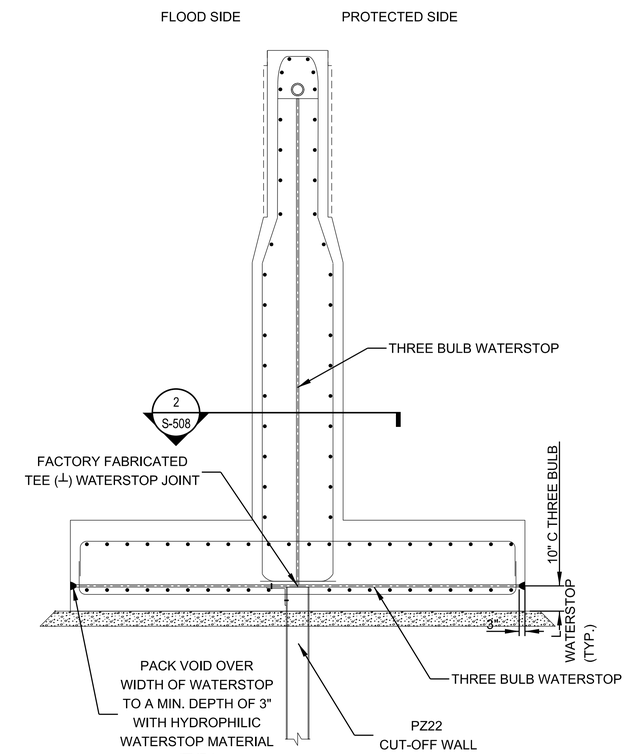

3 S-302 TYPICAL T - FLOOD WALL MONOLITH JOINT WITH SHEET PILE CUT-OFF WALL
SCALE 2/5" = 1'

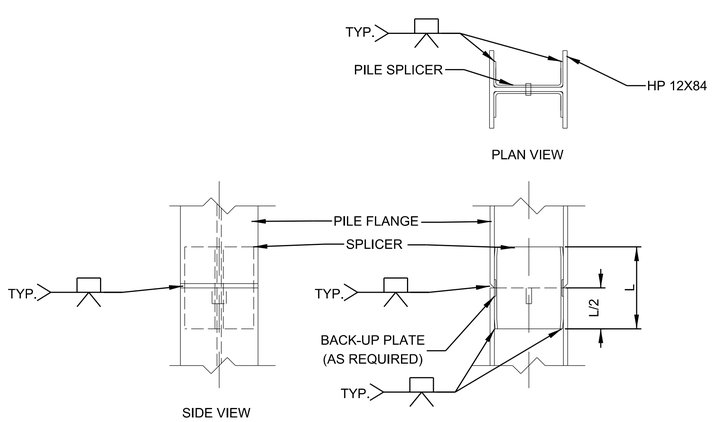

4 S-302 PILE SPLICE DETAIL
SCALE: NTS

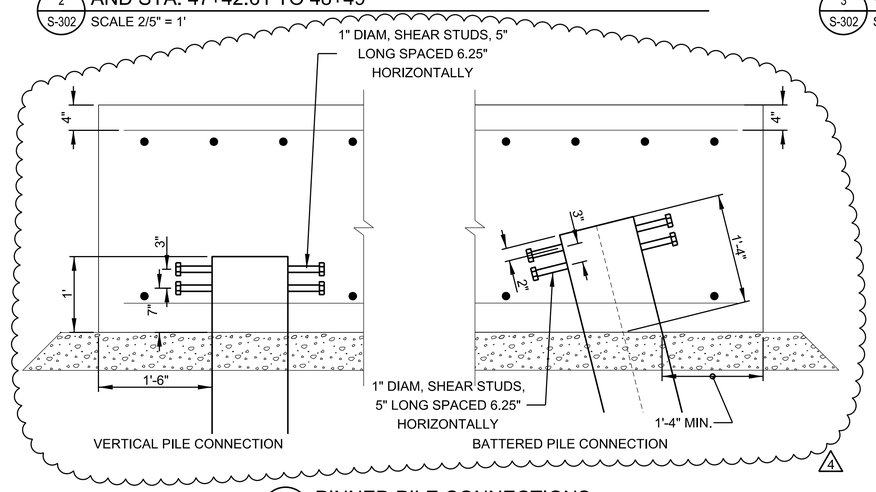

5 S-302 PINNED PILE CONNECTIONS
SCALE: NTS

NOTES:

1. THE TYPICAL FLOODWALL SECTIONS FOR THE PIPES ARE SHOWN ON SHEET S-307 TO S-310.
2. THE TYPICAL FLOODWALL SECTIONS FOR THE CLOSURE GATES ARE SHOWN ON SHEET S-303 AND S-304.
3. THE PILE LENGTHS ARE STATED FOR ESTIMATING PURPOSES ONLY. THE ACTUAL PILE LENGTHS SHALL BE BASED ON THE PILE LOAD TEST.
4. BATTER PILE BOTTOM TIP ELEVATION SHALL MATCH THE VERTICAL PILE BOTTOM TIP ELEVATION.
5. T-FLOODWALL SECTION STA. 23+98.25 TO STA. 24+28.25 LOCATED IN 3/S-520.
6. T-FLOODWALL SECTION STA. 47+12.61 TO STA. 47+42.61 LOCATED IN 4/S-519.
7. BROADWAY CLOSURE GATE IS AT STA. 47+94 TO STA. 47+90.
8. MINIMUM OF 6" CRUSH STONE BASE, SHOWN SCHEMATICALLY, OR MUD SLAB TO FACILITATE CONSTRUCTION AS PART OF CONTRACTOR'S MEANS AND METHODS.
9. FLOODWALLS SHALL BE STAINED AND HAVE AN ANTI-GRAFFITI COATING.
10. FIXED PILE CONNECTIONS LOCATED IN 4/S-301.
11. MAXIMUM 1" OFFSET ON BOTH SIDES OF H-PILES ALLOWED FOR REBAR PASSING THRU THE PILES.

US Army Corps of Engineers®
New York District

MARK	DESCRIPTION	DATE	APPR.	MARK	DESCRIPTION	DATE	APPR.
1	PINNED CONNECTION DETAIL UPDATED	DEC 2017					

DESIGNED BY: JAP | DATE: 2017-06-30 | SOLICITATION NO.:
DWN BY: JAP | CKD BY: | CONTRACT NO.:
SUBMITTED BY: | PLOT SCALE: | ISSUE DATE: | FILE NUMBER:
SIZE: ANSI D | FILE NAME:

U.S. ARMY CORPS OF ENGINEERS
NEW YORK DISTRICT
NEW YORK, NY

HURRICANE & STORM DAMAGE REDUCTION
RARITAN BAY & SANDY HOOK BAY
PHASE II, CONTRACT 4
PORT MONMOUTH, NJ

TYPICAL FLOODWALL SECTIONS

SHEET IDENTIFICATION
S-302
SHEET 114 OF 148

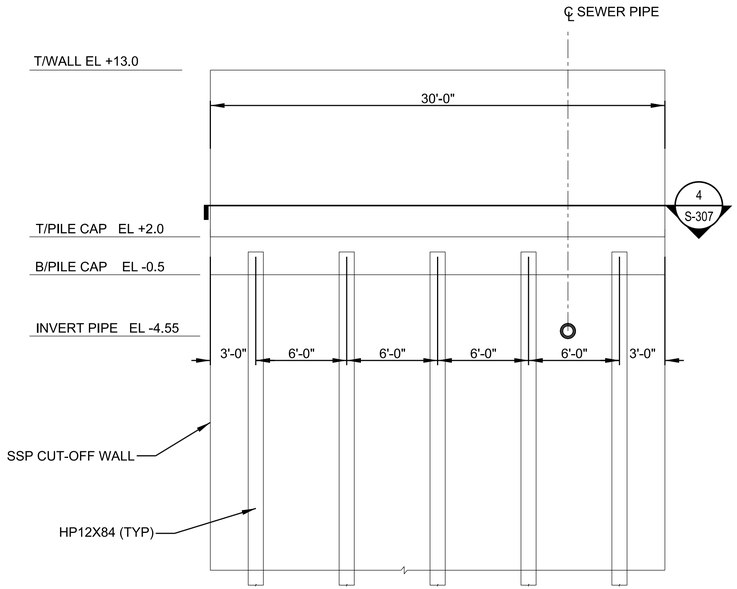

1 S-307 FLOOD WALL SECTION FOR 8 IN SEWER PIPE AT STA 12+11.6
SCALE 1/5" = 1'

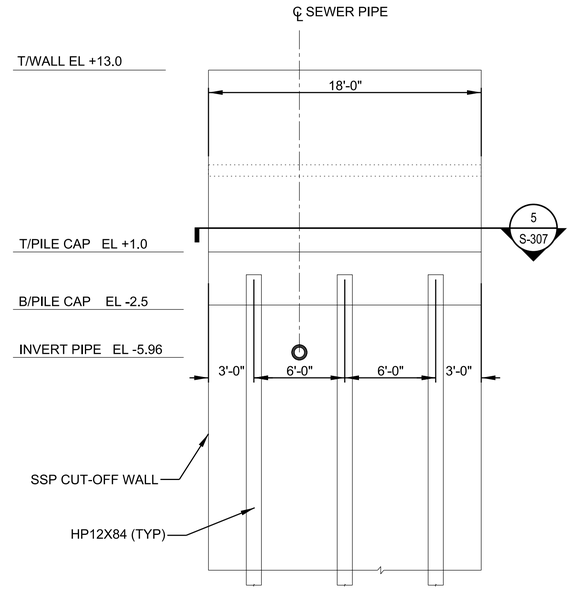

2 S-307 FLOOD WALL SECTION FOR 8 IN SEWER PIPE AT STA 23+68.25
SCALE 1/5" = 1'

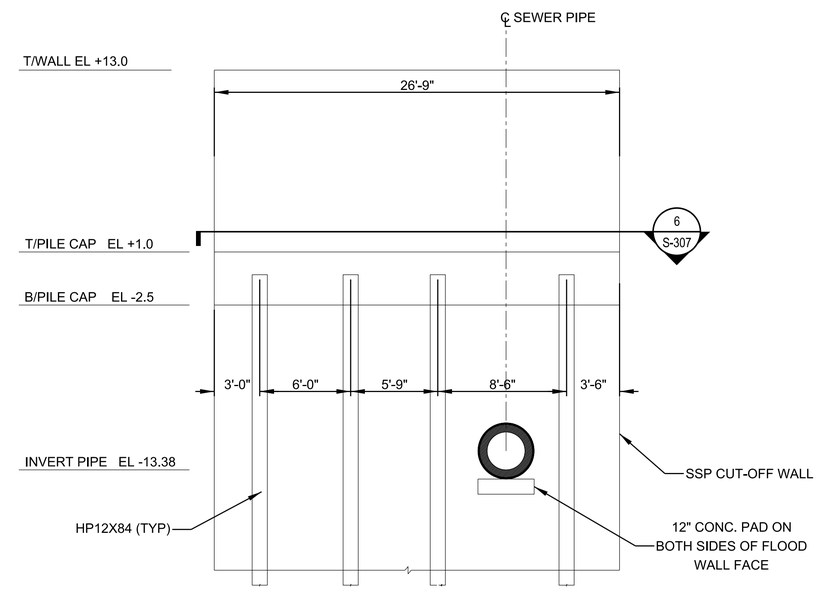

3 S-307 FLOOD WALL SECTION FOR 30 IN SEWER PIPE AT STA 47+91.1
SCALE 1/5" = 1'

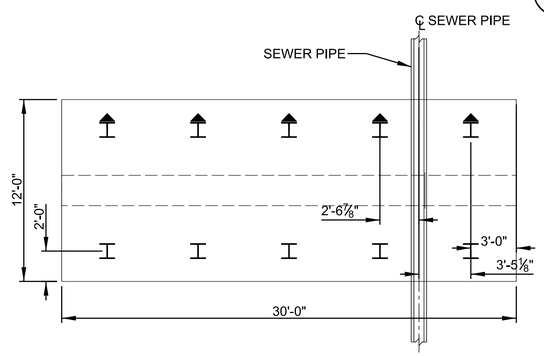

4 S-307 FLOOD WALL PLAN FOR 8 IN SEWER PIPE AT STA 12+11.6
SCALE 1/5" = 1'

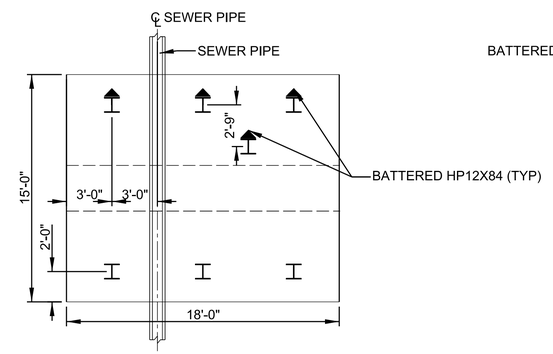

5 S-307 FLOOD WALL PLAN FOR 8 IN SEWER PIPE AT STA 23+68.25
SCALE 1/5" = 1'

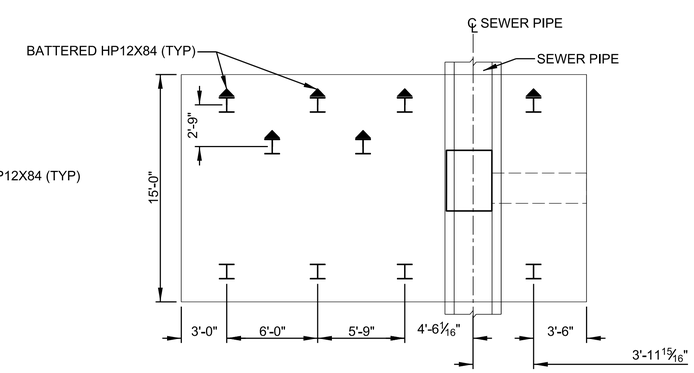

6 S-307 FLOOD WALL PLAN FOR 30 IN SEWER PIPE AT STA 47+91.1
SCALE 1/5" = 1'

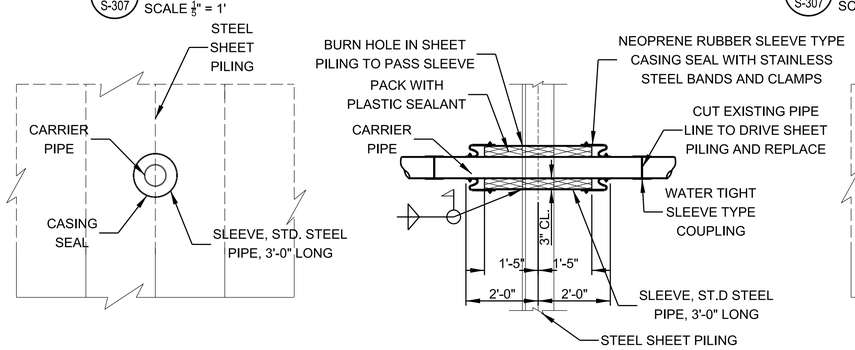

7 S-307 TYPICAL PIPE THRU STEEL SHEET PILING
NTS

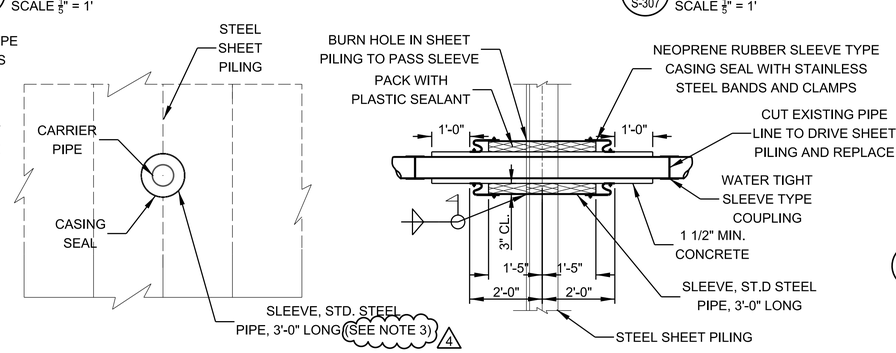

8 S-307 TYPICAL GAS PIPE THRU STEEL SHEET PILING
NTS

NOTES:
1. REFER TO CIVIL DRAWINGS FOR PIPE DETAILS
2. PILES LENGTH ARE NOT SHOWN TO SCALE.
3. CONTRACTOR SHALL SUPPLY AND INSTALL SLEEVES ONLY PER REQUIREMENTS ON SHEET S-311. NJNG TO SUPPLY AND INSTALL ALL GAS MAIN AND ASSOCIATED INTERNAL CASING COMPONENTS.

4

SCALE: 1/5" =1'
0 5' 10'

US Army Corps of Engineers
New York District

MARK	DESCRIPTION	DATE	APPR.
4	NOTES UPDATED	2 NOV 2017	

MARK	DESCRIPTION	DATE	APPR.

U.S. ARMY CORPS OF ENGINEERS
NEW YORK DISTRICT
NEW YORK, NY

DESIGNED BY: JAP
DWN BY: JAP
CKD BY:
SUBMITTED BY:
DATE: 2017-06-30
SOLICITATION NO.:
CONTRACT NO.:
PLOT SCALE:
ISSUE DATE:
FILE NUMBER:
SIZE: ANSI D
FILE NAME:

HURRICANE & STORM DAMAGE REDUCTION
RARITAN BAY & SANDY HOOK BAY
PHASE II, CONTRACT 4
PORT MONMOUTH, NJ

FLOODWALL SECTIONS FOR SEWER PIPES

SHEET IDENTIFICATION
S-307
SHEET 119 OF 148

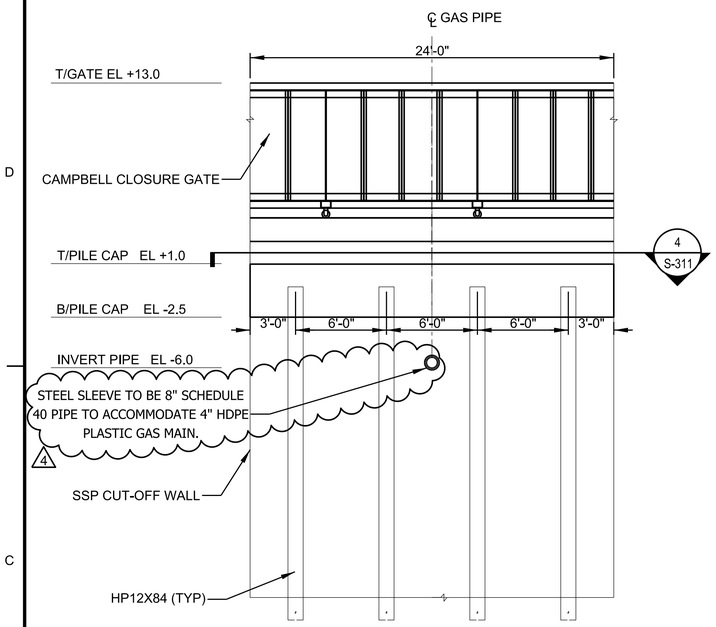

1 S-311 GAS UTILITY PIPE THROUGH GATE SECTION STA 23+45
SCALE 1/5" = 1'

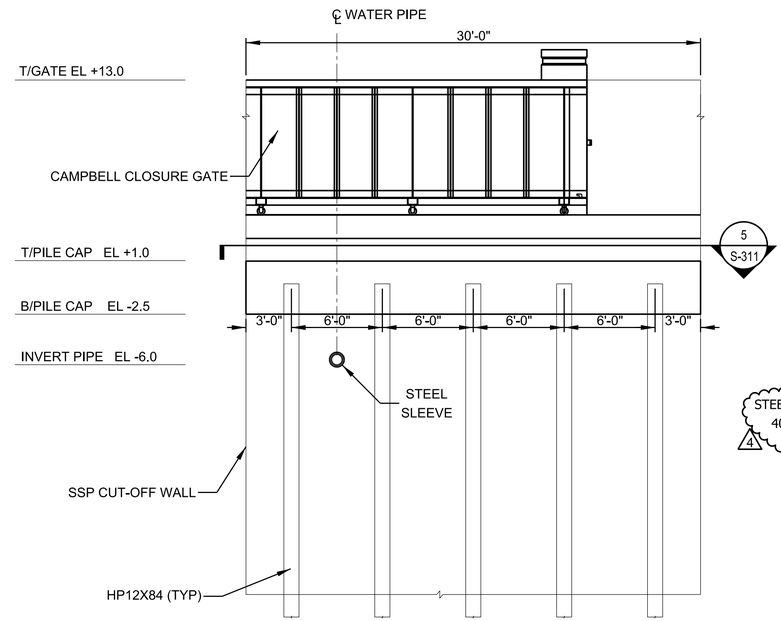

2 S-311 WATER UTILITY PIPE THROUGH GATE SECTION STA 23+33
SCALE 1/5" = 1'

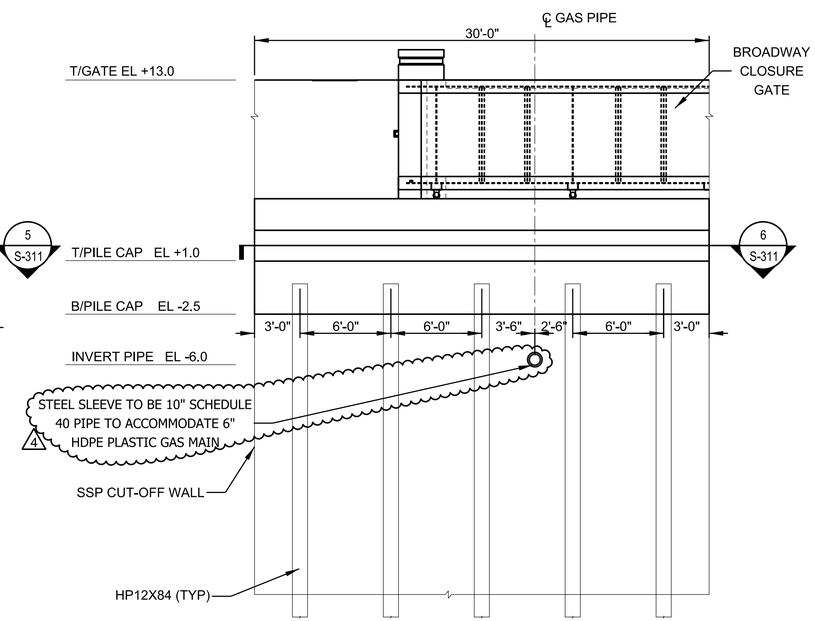

3 S-311 GAS UTILITY PIPE THROUGH GATE SECTION STA 47+61
SCALE 1/5" = 1'

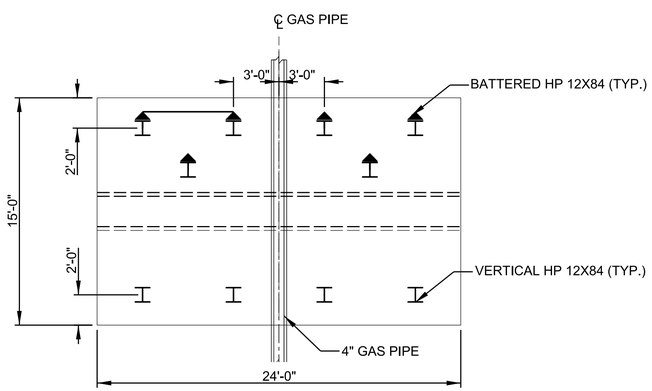

4 S-311 GAS UTILITY PIPE THROUGH GATE PLAN STA 23+45
SCALE 1/5" = 1'

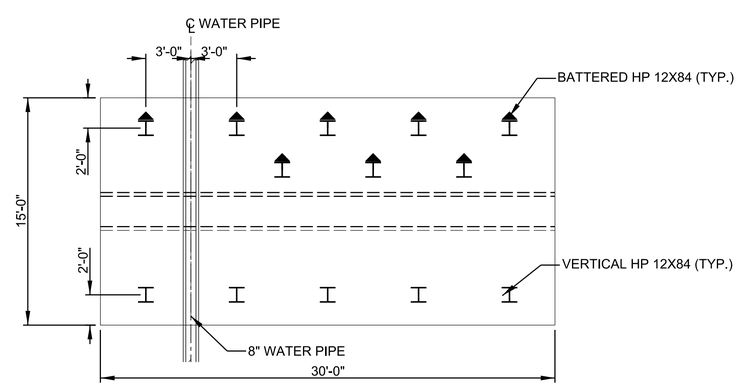

5 S-311 WATER UTILITY PIPE THROUGH GATE PLAN STA 23+33
SCALE 1/5" = 1'

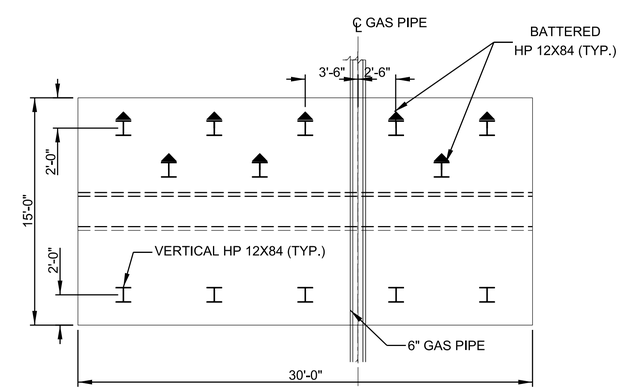

6 S-311 GAS UTILITY PIPE THROUGH GATE PLAN STA 47+61
SCALE 1/5" = 1'

NOTES:
1. REFER TO CIVIL DRAWINGS FOR PIPE DETAILS
2. PILES LENGTH ARE NOT SHOWN TO SCALE.
3. SEE DETAIL 7/S-307 FOR TYPICAL PIPE THRU STEEL SHEET PILING.
4. SEE DETAIL 8/S-307 FOR TYPICAL GAS PIPE THRU STEEL SHEET PILING.

SCALE: 1/5" =1'
0 5' 10'

US Army Corps of Engineers®
New York District

MARK	DESCRIPTION	DATE	APPR.	MARK	DESCRIPTION	DATE	APPR.
1	revised STA for sections 1 + 2	24 AUG 2017					
2	STEEL SLEEVE NOTE UPDATED	2 NOV 2017					

DESIGNED BY: JAP
DATE: 2017-06-30
DWN BY: JAP
CKD BY:
SOLICITATION NO.:
SUBMITTED BY:
CONTRACT NO.:
PLOT SCALE:
ISSUE DATE:
FILE NUMBER:
SIZE: ANSI D
FILE NAME:

U.S. ARMY CORPS OF ENGINEERS
NEW YORK DISTRICT
NEW YORK, NY

HURRICANE & STORM DAMAGE REDUCTION
RARITAN BAY & SANDY HOOK BAY
PHASE II, CONTRACT 4
FORT MONMOUTH, NJ

FLOODWALL SECTIONS FOR GAS AND WATER PIPES

SHEET IDENTIFICATION
S-311
SHEET 123 OF 148

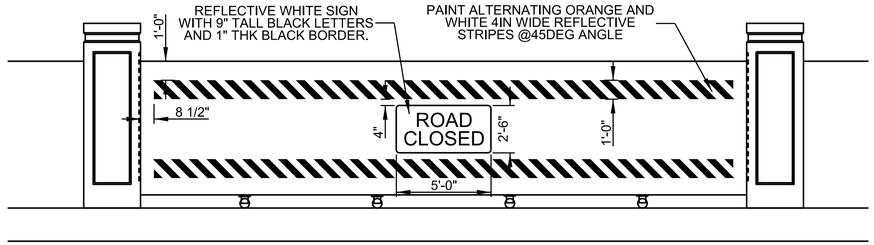

1 S-503 CLOSURE GATE- WARNING SIGNAGE (PROTECTED SIDE)
NTS

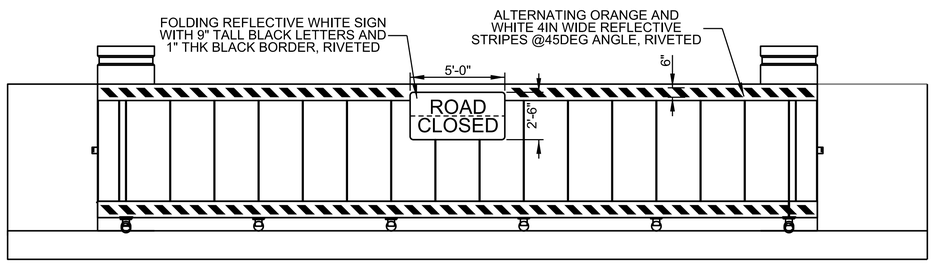

2 S-503 CLOSURE GATE- WARNING SIGNAGE (FLOOD SIDE)
NTS

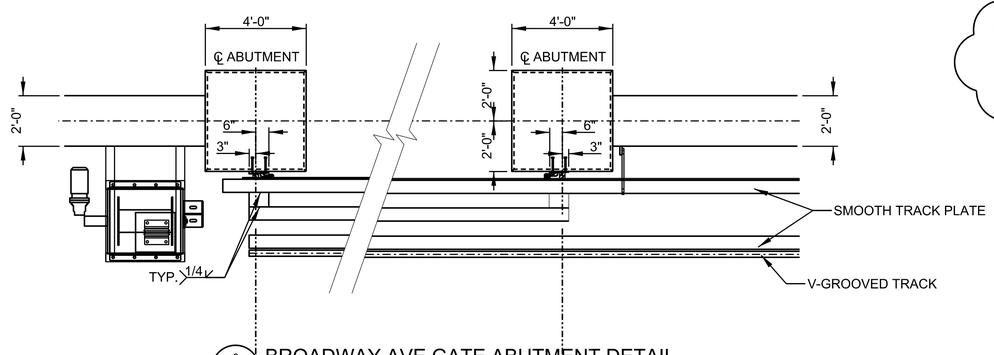

3 S-503 BROADWAY AVE GATE ABUTMENT DETAIL
NTS

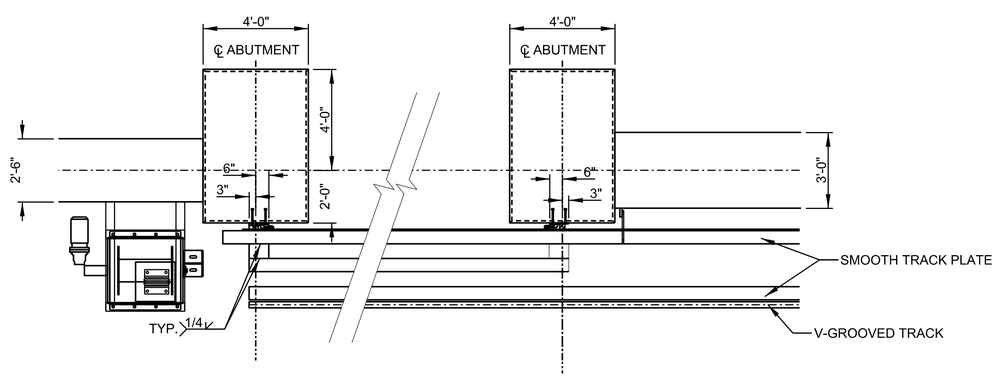

4 S-503 CAMPBELL AVE GATE ABUTMENT DETAIL
NTS

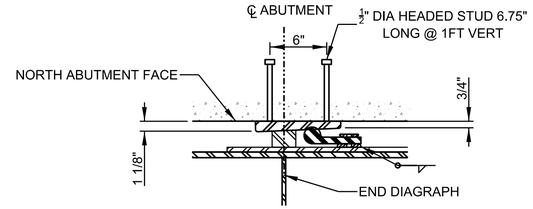

5 S-503 SOUTH VERTICAL SEAL DETAIL
NTS

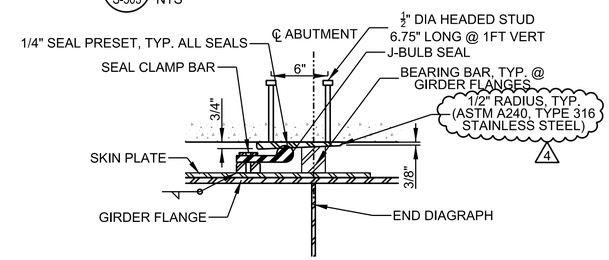

6 S-503 NORTH VERTICAL SEAL DETAIL
NTS

NOTES:
1.FINISH SEAL PLATES TO 125 MICROINCHES
2. SEAL BAR TO BE ASTM A240, TYPE 316 STAINLESS STEEL
3. HEADED STUDS TO BE ASTM A709. WELD PER AWS D1.6
4

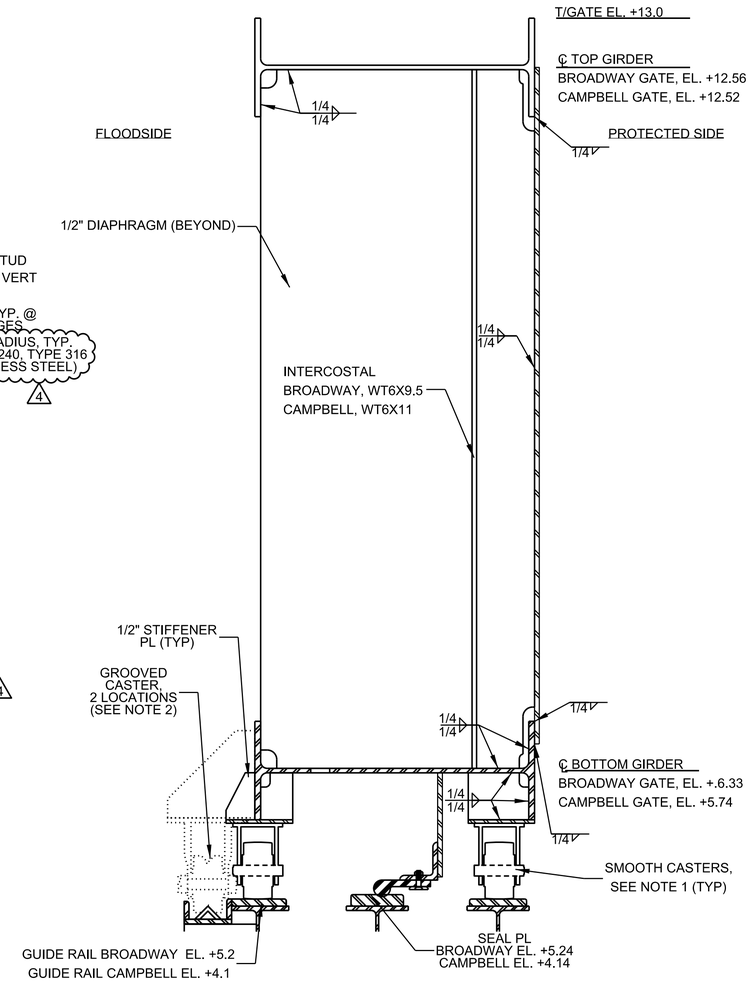

NOTES:
1. SMOOTH CASTERS ARE 3 IN WIDE WITH AN OVERALL HEIGHT OF 8 IN FOR BROADWAY GATE AND 3 IN WIDE WITH AN OVERALL HEIGHT OF 11IN FOR CAMPBELL GATE.
2. GROOVE CASTERS ARE 3 IN WIDE WITH AN OVERALL HEIGHT OF 10 IN FOR BROADWAY GATE AND 4 IN WIDE WITH AN OVERALL HEIGHT OF 11IN FOR CAMPBELL GATE.
3. ALL WELDS SHALL BE CONTINUOUS AND WRAPPED (IF POSSIBLE).

7 S-503 CLOSURE GATE SECTION
NTS

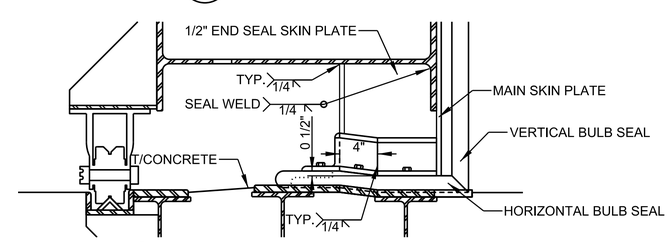

8 S-503 END SEAL PLATE DETAIL
NTS

US Army Corps of Engineers
New York District

MARK	DESCRIPTION	DATE	APPR.	MARK	DESCRIPTION	DATE	APPR.

MATERIAL CHANGE AND NOTE ADDED DEC-2017

DESIGNED BY: | DATE: 2017-06-30
DWN BY: BEC | CKD BY: CHK | SOLICITATION NO.:
SUBMITTED BY: | CONTRACT NO.:
PLOT SCALE: | ISSUE DATE: | FILE NUMBER:
SIZE: ANSI D | FILE NAME:

U.S. ARMY CORPS OF ENGINEERS
NEW YORK DISTRICT
NEW YORK, NY

HURRICANE & STORM DAMAGE REDUCTION
RARITAN BAY & SANDY HOOK BAY
PHASE II, CONTRACT 4
PORT MONMOUTH, NJ

CLOSURE GATE DETAILS
PART 1

SHEET IDENTIFICATION
S-503
SHEET 126 OF 148

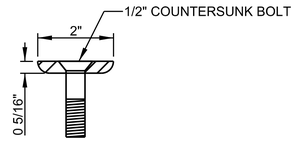

NOTE:
SEAL BAR TO BE ASTM A240, TYPE 316 STAINLESS STEEL

4

1 S-504 SEAL CLAMP BAR
NTS

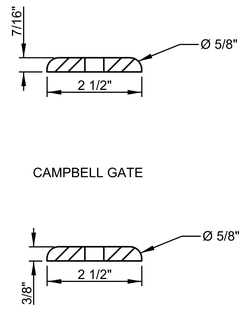

NOTE:
DEFLECTION BAR TO BE ASTM A709

4

2 S-504 SEAL DEFLECTION BAR (NORTH ABUTMENT)
NTS

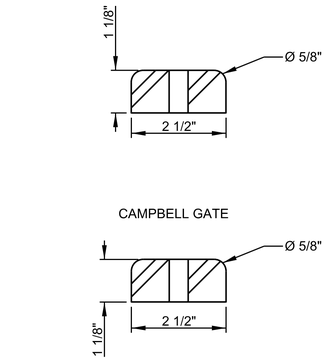

NOTE:
DEFLECTION BAR TO BE ASTM A709

4

3 S-504 SEAL DEFLECTION BAR (SOUTH ABUTMENT)
NTS

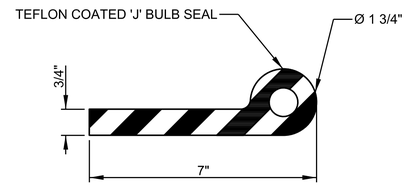

4 S-504 'J' BULB SEAL
NTS

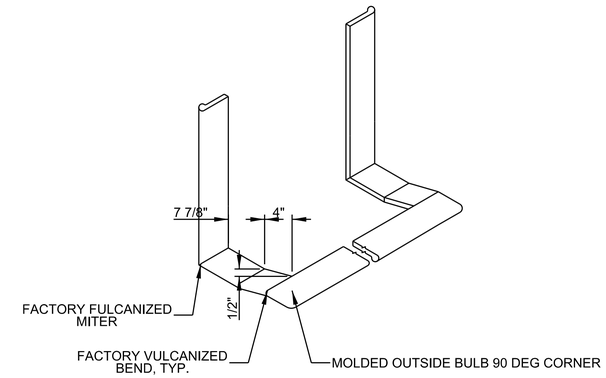

NOTES: CONTRACTOR SHALL VERIFY SEAL DIMENSIONS AND ARRANGEMENT IN DEVELOPMENT OF SHOP DRAWINGS.

5 S-504 SEAL ARRANGEMENT
NTS

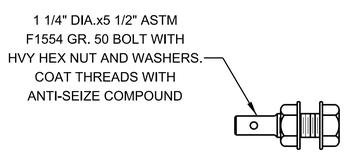

6 S-504 LOCKING PIN
NTS

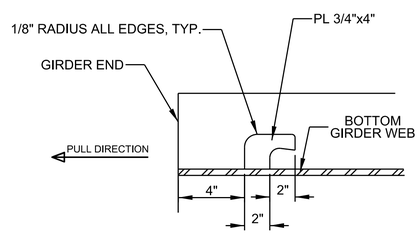

NOTES: DIMENSIONS SIMILAR TO MANUAL CABLE HOOK

7 S-504 WINCH CABLE HOOK DETAIL
NTS

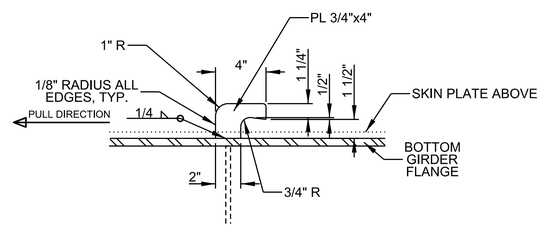

8 S-504 MANUAL CABLE HOOK DETAIL
NTS

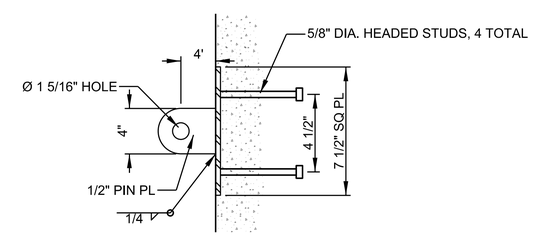

9 S-504 WALL PLATE DETAIL
NTS

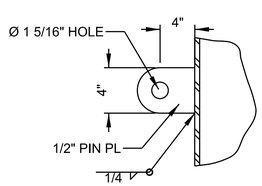

10 S-504 LATCH PLATE DETAIL
NTS

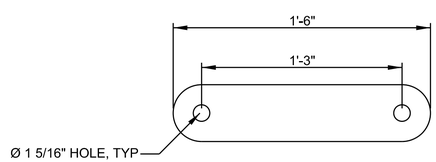

11 S-504 GATE PIN PLATE DETAIL
NTS

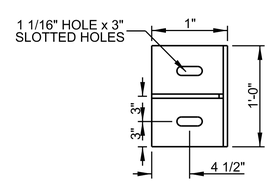

12 S-504 GATE STOP PLAN
NTS

US Army Corps of Engineers
New York District

MARK	DESCRIPTION	DATE	APPR.	MARK	DESCRIPTION	DATE	APPR.
1	MATERIAL NOTE ADDED	DEC 2017					

U.S. ARMY CORPS OF ENGINEERS
NEW YORK DISTRICT
NEW YORK, NY

DESIGNED BY: | DATE: 2017-06-30 | SOLICITATION NO.: | DWN BY: BEC | CKD BY: CHK | CONTRACT NO.: | SUBMITTED BY: | PLOT SCALE: | ISSUE DATE: | FILE NUMBER: | SIZE: ANSI D | FILE NAME:

HURRICANE & STORM DAMAGE REDUCTION
RARITAN BAY & SANDY HOOK BAY
PHASE II, CONTRACT 4
PORT MONMOUTH, NJ

CLOSURE GATE DETAILS
PART 2

SHEET IDENTIFICATION
S-504
SHEET 127 OF 148

NOTES:
1. BROADWAY- HAMILTON R-SEC-63FST CASTER, OR APPROVED EQUAL. MIN WORKING LOAD CAPACITY 6000 LBS
2. CAMPBELL- HAMILTON R-MD-83FST CASTER, OR APPROVED EQUAL. MIN WORKING LOAD CAPACITY 14000 LBS

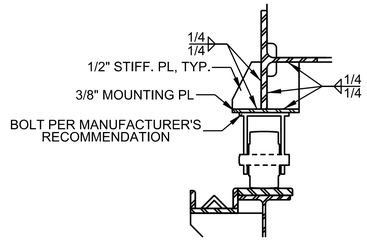

1 S-505 SMOOTH CASTER ATTACHMENT DETAIL
NTS

NOTES:
1. BROADWAY- HAMILTON R-MD-63FVT CASTER, OR APPROVED EQUAL. MIN WORKING LOAD CAPACITY 10000 LBS
2. CAMPBELL- HAMILTON R-MD-84FVT CASTER, OR APPROVED EQUAL. MIN WORKING LOAD CAPACITY 15000 LBS

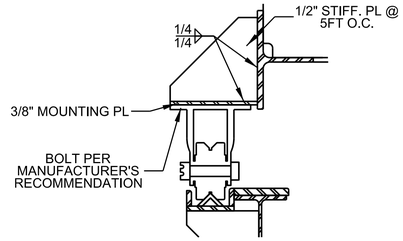

SEE S-506 FOR PLATE DIMENSION

2 S-505 V-GROOVED CASTER ATTACHMENT DETAIL
NTS

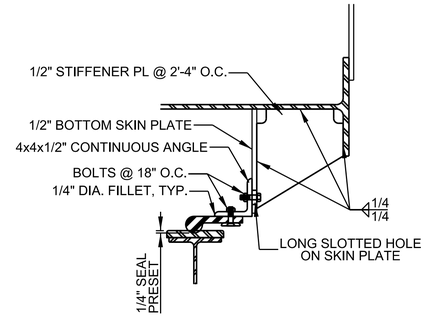

3 S-505 HORIZONTAL SEAL AND SKIN PLATE
NTS

NOTES:
1. BROADWAY- HAMILTON R-SEC-63FST CASTER, OR APPROVED EQUAL. MIN WORKING LOAD CAPACITY 6000 LBS
2. CAMPBELL- HAMILTON R-MD-83FST CASTER, OR APPROVED EQUAL. MIN WORKING LOAD CAPACITY 14000 LBS

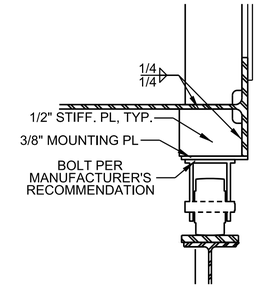

4 S-505 SMOOTH CASTER ATTACHMENT DETAIL
NTS

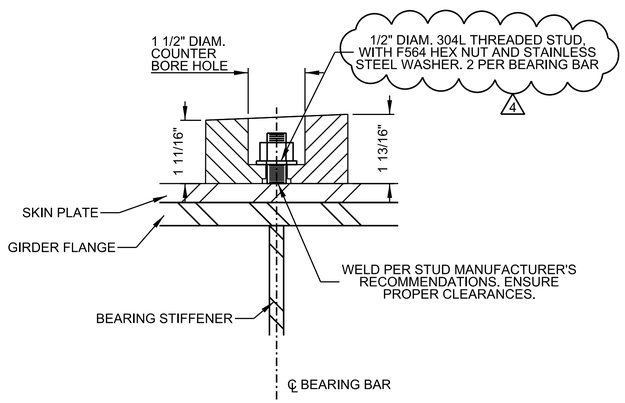

NORTH ABUTMENT

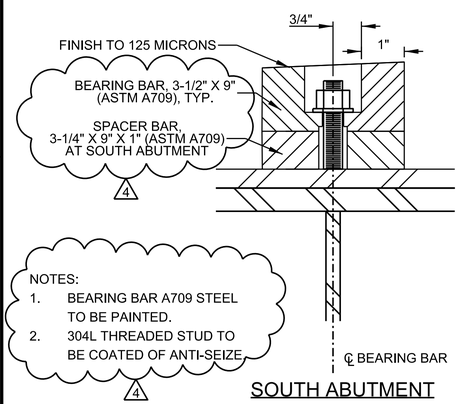

SOUTH ABUTMENT

5 S-505 BEARING BAR ATTACHMENT DETAIL
NTS

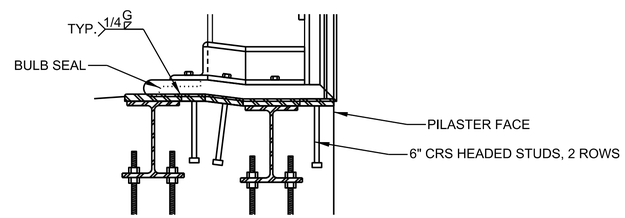

6 S-505 GUIDE RAILS AND SEAL PLATES AT PILASTER
NTS

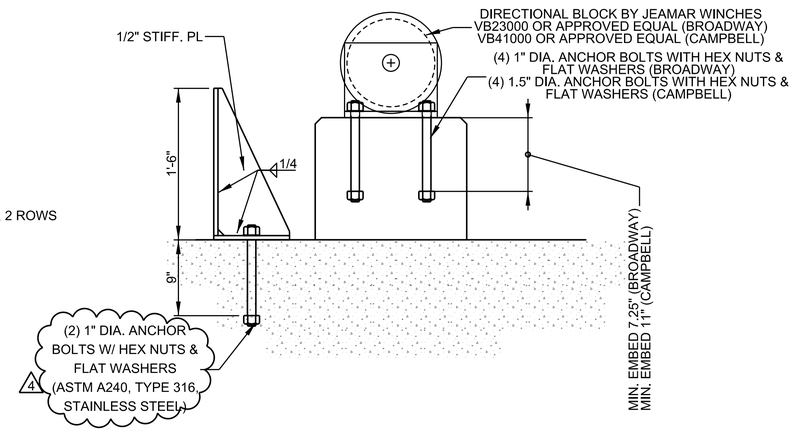

7 S-505 WINCH DIRECTIONAL BLOCK & GATE STOP
NTS

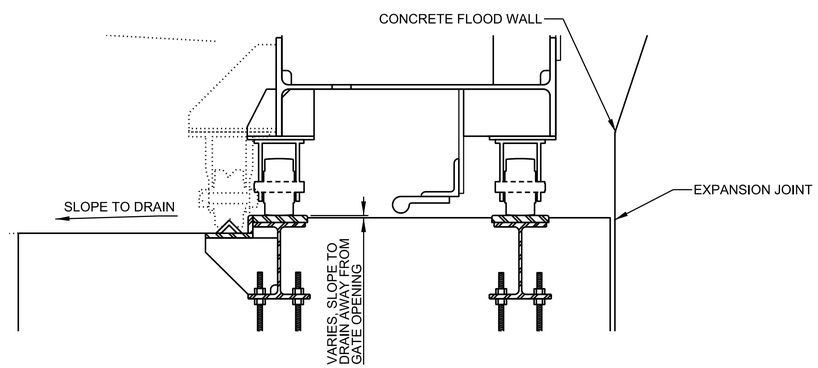

8 S-505 GUIDE RAILS AND SEAL PLATES AT GATE STORAGE
NTS

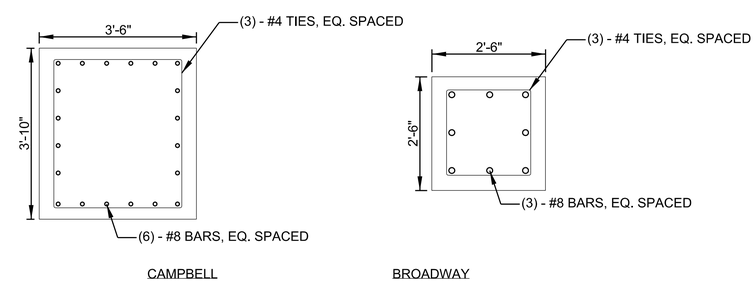

9 S-505 DIRECTIONAL BLOCK PLATFORM- REINFOCEMENT DETAIL
NTS

US Army Corps of Engineers
New York District

MARK	DESCRIPTION	DATE	APPR.	MARK	DESCRIPTION	DATE	APPR.
1	DETAILS CHANGED AND NOTE ADDED	DEC 2017					

DESIGNED BY: BEC
DWN BY: BEC
CKD BY: CHK
SUBMITTED BY:
PLOT SCALE:
SIZE: ANSI D
DATE: 2017-08-30
SOLICITATION NO.:
CONTRACT NO.:
ISSUE DATE:
FILE NUMBER:
FILE NAME:

U.S. ARMY CORPS OF ENGINEERS
NEW YORK DISTRICT
NEW YORK, NY

HURRICANE & STORM DAMAGE REDUCTION
RARITAN BAY & SANDY HOOK BAY
PHASE II, CONTRACT 4
PORT MONMOUTH, NJ

CLOSURE GATE DETAILS
PART 3

SHEET IDENTIFICATION
S-505
SHEET 128 OF 148

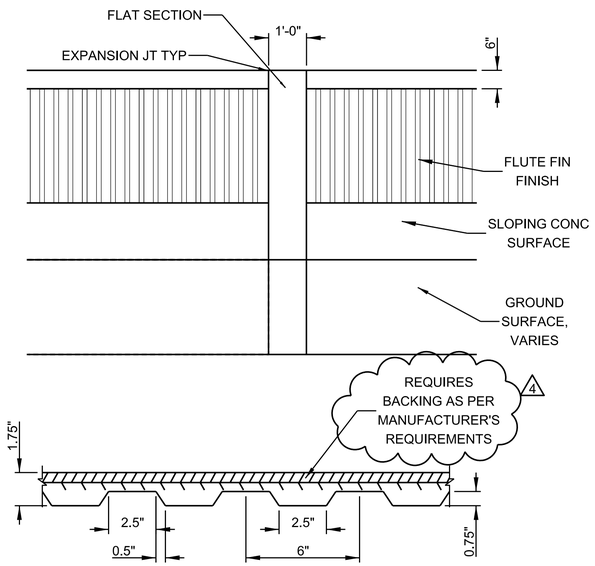

FLUTED FIN FINISH TEXTURE

1 / S-508 ELEVATION AT MONOLITH JOINTS
NTS

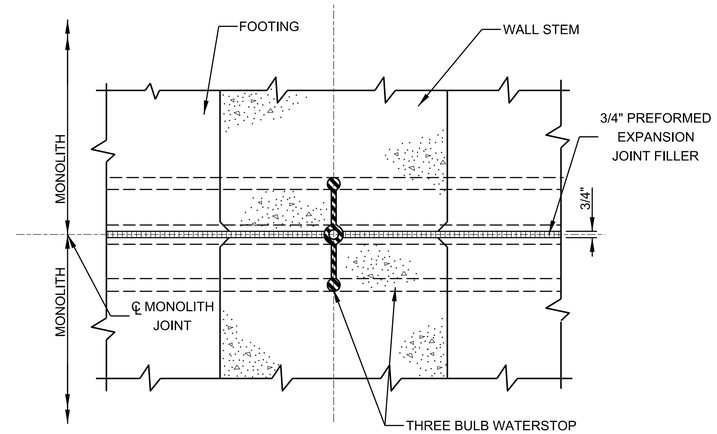

2 / S-508 WATERSTOP AT MONOLITH JOINTS
NTS

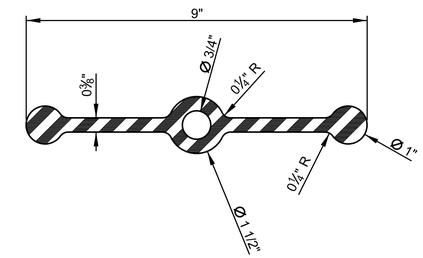

3 / S-508 THREE BULB WATERSTOP
NTS

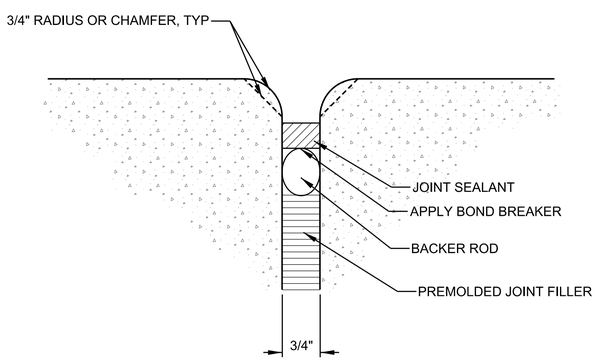

4 / S-508 TYPICAL EXPANSION JOINT
NTS

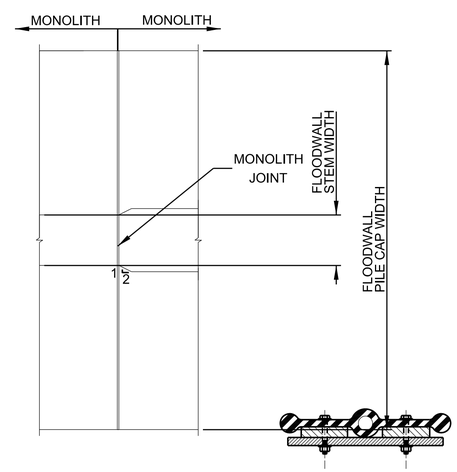

5 / S-508 FLOODWALL STEM TRANSITION DETAIL
NTS

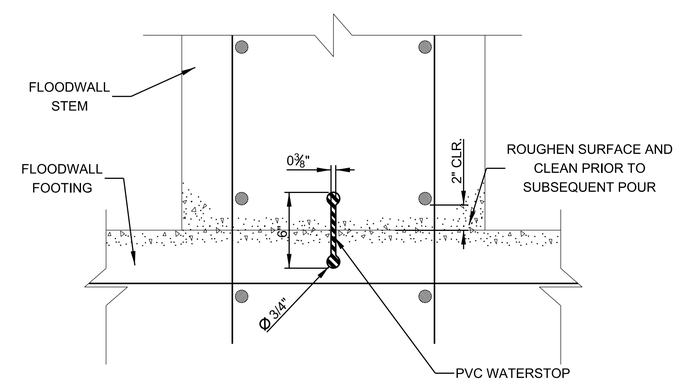

6 / S-508 TYPICAL CONSTRUCTION JOINT
NTS

US Army Corps of Engineers
New York District

MARK	DESCRIPTION	DATE	APPR.	MARK	DESCRIPTION	DATE	APPR.

NOTE UPDATED

DESIGNED BY: JAP | DATE: 2017-06-30
DWN BY: JAP | CKD BY: CHK | SOLICITATION NO.:
SUBMITTED BY: | CONTRACT NO.:
PLOT SCALE: | ISSUE DATE: | FILE NUMBER:
SIZE: ANSI D | FILE NAME:

U.S. ARMY CORPS OF ENGINEERS
NEW YORK DISTRICT
NEW YORK, NY

HURRICANE & STORM DAMAGE REDUCTION
RARITAN BAY & SANDY HOOK BAY
PHASE II, CONTRACT 4
PORT MONMOUTH, NJ

FLOODWALL DETAILS

SHEET IDENTIFICATION
S-508
SHEET 131 OF 148

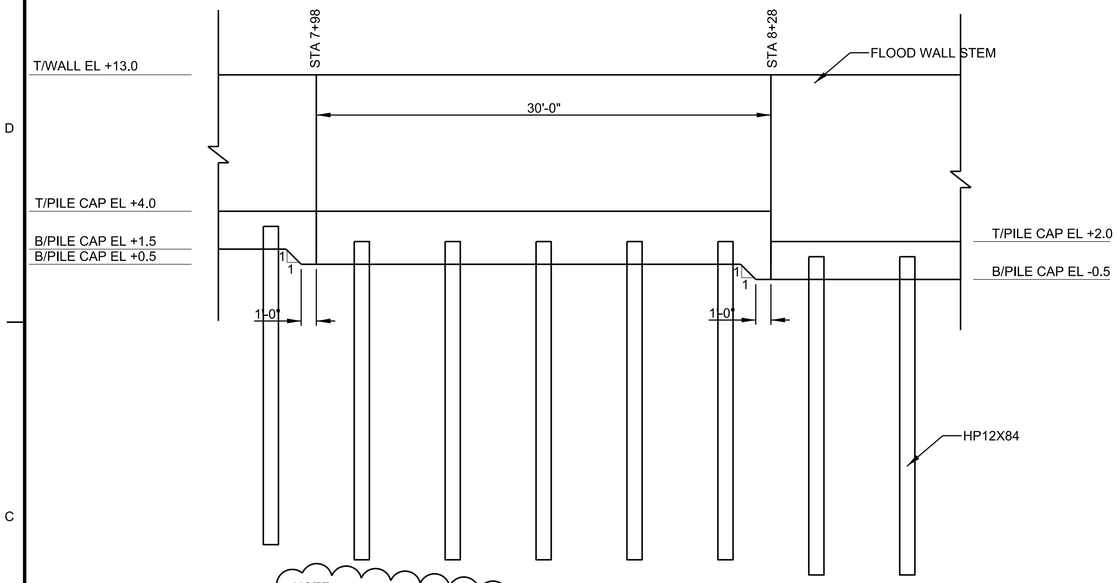

4 NOTE:
PILE CONNECTIONS ARE PINNED.

1 / S-519 T - FLOOD WALL SECTION STA. 7+98 TO STA. 8+28
SCALE 1/5" = 1'

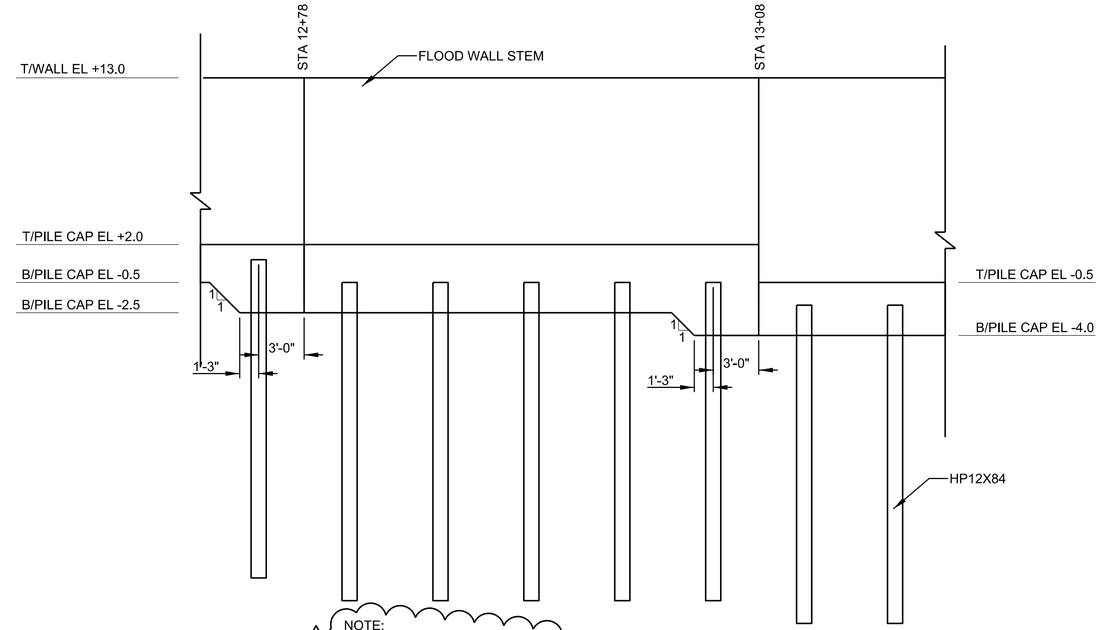

4 NOTE:
PILE CONNECTIONS ARE PINNED.

2 / S-519 T - FLOOD WALL SECTION STA. 12+78 TO STA. 13+08
SCALE 1/5" = 1'

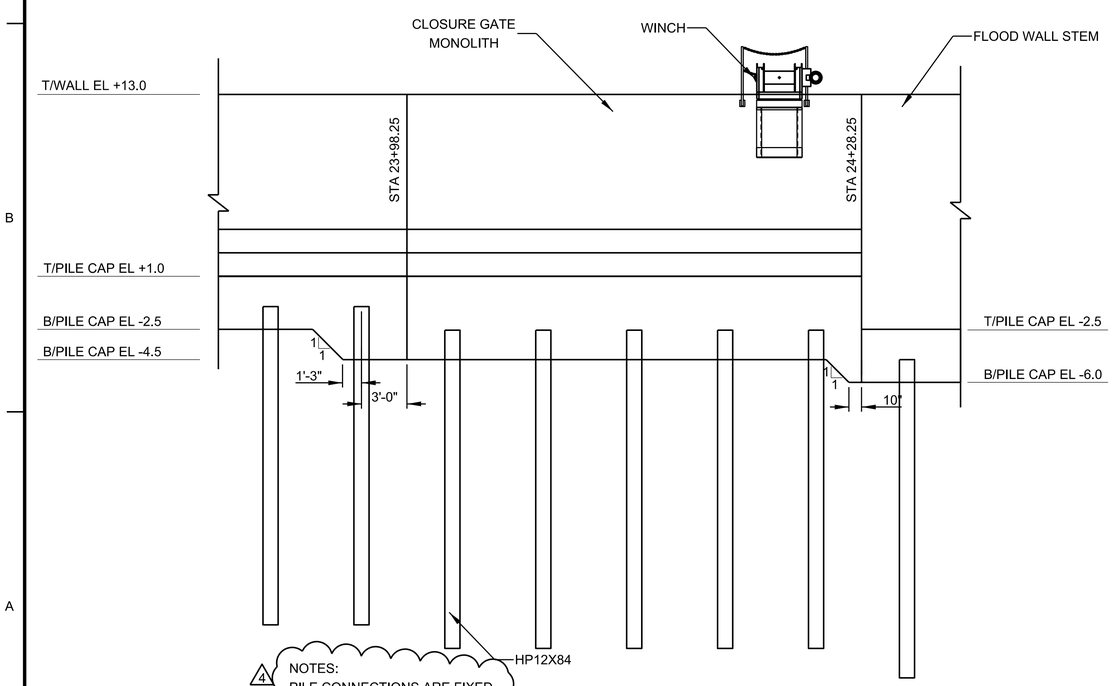

4 NOTES:
PILE CONNECTIONS ARE FIXED.

3 / S-519 T - FLOOD WALL SECTION STA. 23+98.25 TO STA. 24+28.25
SCALE 1/5" = 1'

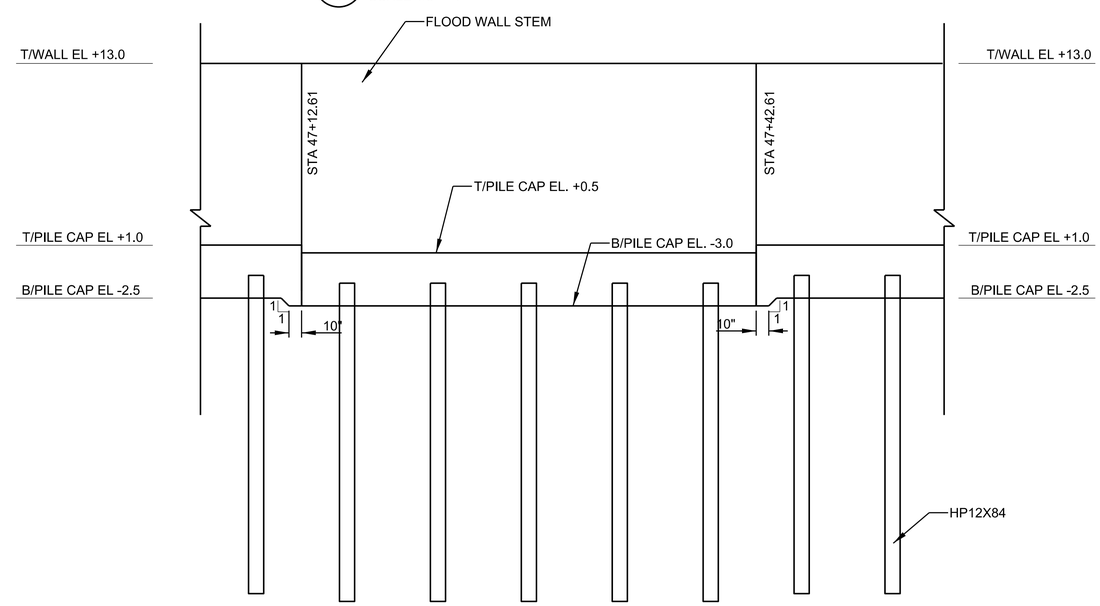

4 NOTES:
PILE CONNECTIONS ARE FIXED.

4 / S-519 T - FLOOD WALL SECTION STA. 47+12.61 TO STA. 47+42.61
SCALE 1/5" = 1'

NOTES:
1. PILES LENGTH ARE NOT SHOWN TO SCALE.

US Army Corps of Engineers
New York District

MARK	DESCRIPTION	DATE	APPR.	MARK	DESCRIPTION	DATE	APPR.
4	NOTE ADDED	DEC 2017					

DESIGNED BY: JAP
DATE: 2017-06-30
DWN BY: JAP
CKD BY:
SOLICITATION NO.:
SUBMITTED BY:
CONTRACT NO.:
PLOT SCALE:
ISSUE DATE:
FILE NUMBER:
SIZE: ANSI D
FILE NAME:

U.S. ARMY CORPS OF ENGINEERS
NEW YORK DISTRICT
NEW YORK, NY

HURRICANE & STORM DAMAGE REDUCTION
RARITAN BAY & SANDY HOOK BAY
PHASE II, CONTRACT 4
PORT MONMOUTH, NJ

TYPICAL FLOOD TRANSITION DETAIL

SHEET IDENTIFICATION
S-519
SHEET 142 OF 148